LOOP & FRIENDS BUILT-IN WASHBASIN OVAL

PRODUCT INFORMATION

Article title	Villeroy & Boch Loop & Friends Built-in washbasin, 660 x 470 x 230 mm, White Alpin, with overflow, unground
Article number	61553001
Assembly / Assembly type	built-in installation
Scope of delivery	1 x built-in washbasin , 1 x extended ball rod to operate pop-up outlet valve 1 x cut-out template
Depth in mm	470
Width in mm	660
Height in mm	230
Interior depth	180
Collection	Loop & Friends
Material	Sanitary ceramics
surface	glossy
Colour name	White Alpin
With overflow	Yes
Shape	Oval
Colour designation	White Alpin
Antibacterial surface (with AntiBac)	No
Easy surface cleaning (CeramicPlus)	No
Underside of washbasin	unground
Number of bowls	1

TECHNICAL DRAWINGS

61553001

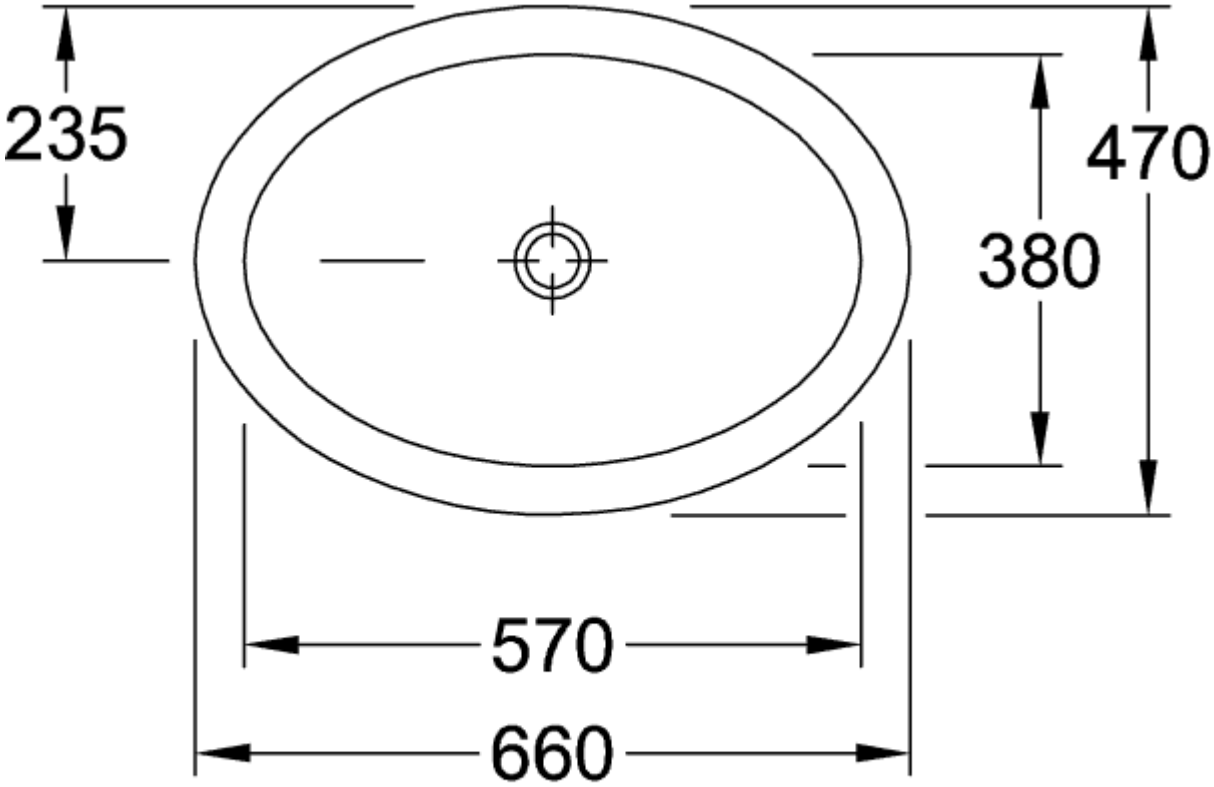

61553001

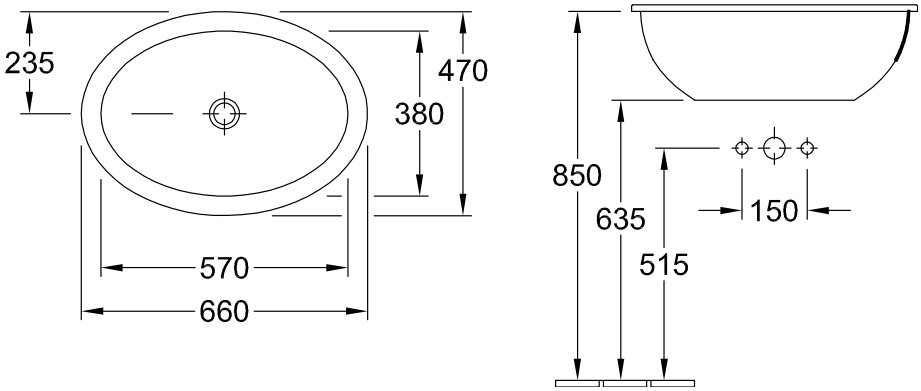

61553001

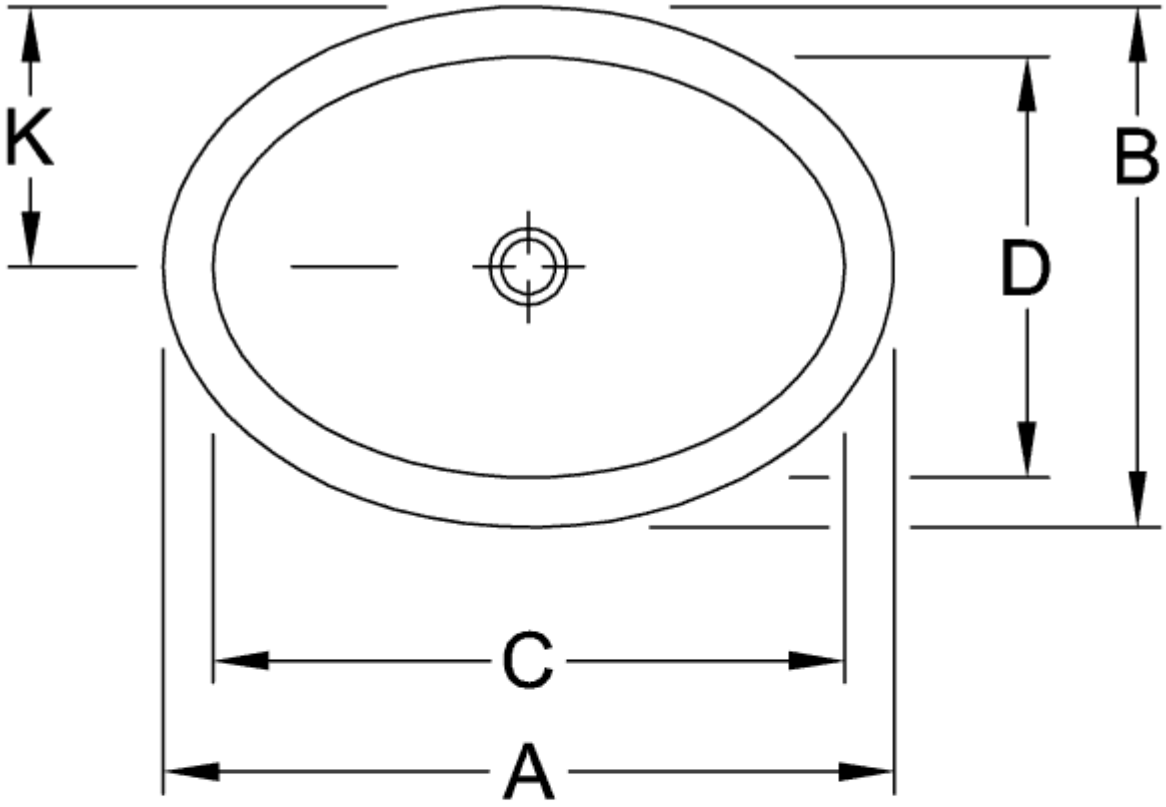

	A	B	C	D	G	K	R
6155 30	660	470	570	380	635	235	515
6155 31	660	470	570	380	635	235	515
6155 20	570	410	485	325	650	205	530
6155 21	570	410	485	325	650	205	530
6155 10	505	360	430	285	680	180	560
6155 11	505	360	430	285	680	180	560
6155 00	450	320	385	255	700	160	580
6155 01	450	320	385	255	700	160	580

61553001

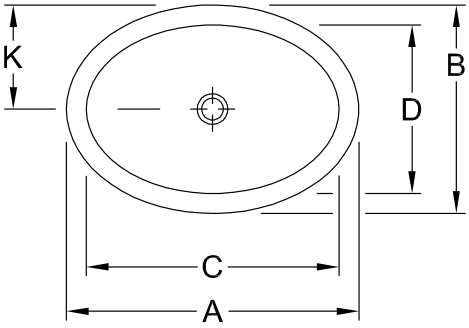

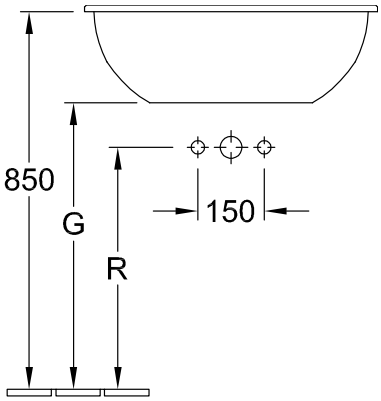

	A	B	C	D	G	K	R
6155 30	660	470	570	380	635	235	515
6155 31	660	470	570	380	635	235	515
6155 20	570	410	485	325	650	205	530
6155 21	570	410	485	325	650	205	530
6155 10	505	360	430	285	680	180	560
6155 11	505	360	430	285	680	180	560
6155 00	450	320	385	255	700	160	580
6155 01	450	320	385	255	700	160	580