HOMMAGE WASHDOWN TOILET OVAL

PRODUCT INFORMATION

Article title	Villeroy & Boch Hommage Washdown toilet, wall-mounted, White Alpin CeramicPlus
Article number	6661B0R1
Assembly / Assembly type	wall-mounted
Scope of delivery	1 x washdown toilet , 1 x fastening set
Depth in mm	600
Width in mm	370
Height in mm	410
Collection	Hommage
Suitable for	Concealed cistern
Innovative flushing technology (with TwistFlush)	No
Flush volume l	3 / 6 l
Wall-mounted - floor-standing	wall-mounted
Material	Sanitary ceramics
surface	glossy
Colour name	White Alpin CeramicPlus
Shape	Oval
Colour designation	White Alpin
Antibacterial surface (with AntiBac)	No
Easy surface cleaning (CeramicPlus)	Yes
Rimless (mit DirectFlush)	No
Flush type	Washdown toilet
Integrated freshness solution (with ViFresh)	No
Outlet / outlet	horizontal outlet

TECHNICAL DRAWINGS

6661B0R1

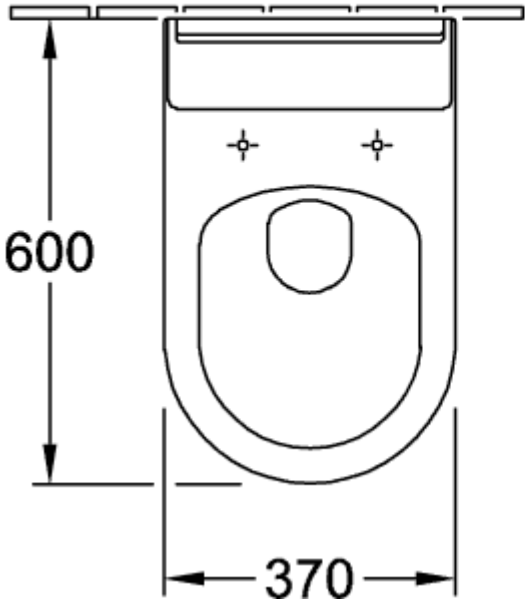

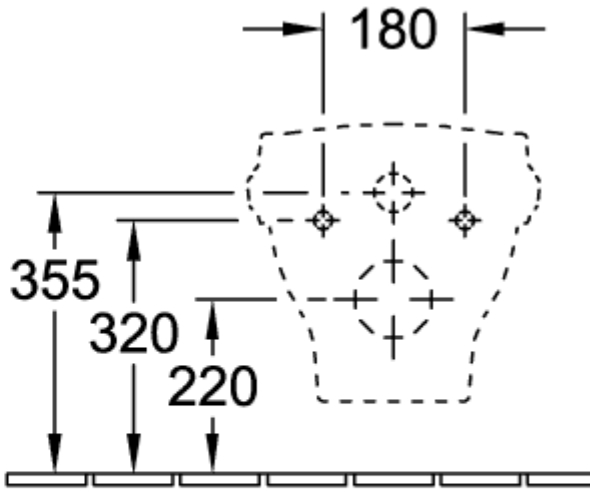
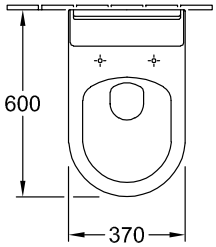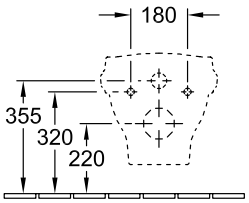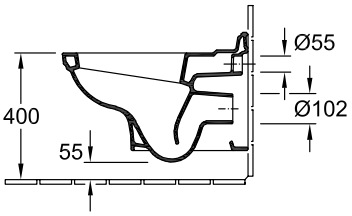
6661B0R1