O.NOVO WASHING TROUGH RECTANGLE

PRODUCT INFORMATION

Article title	Villeroy & Boch O.novo Washing trough, 1000 x 415 x 205 mm, White Alpin, unground
Article number	68200001
Assembly instructions	fastening with mounting-brackets, fastening with profile iron
Scope of delivery	1 x washing trough
Depth in mm	415
Width in mm	1000
Height in mm	205
Interior depth	230
Collection	O.novo
Material	Sanitary ceramics
surface	glossy
Colour name	White Alpin
With overflow	No
Shape	Rectangle
Colour designation	White Alpin
Antibacterial surface (with AntiBac)	No
Easy surface cleaning (CeramicPlus)	No
Underside of washbasin	unground
Number of bowls	1

TECHNICAL DRAWINGS

68200001

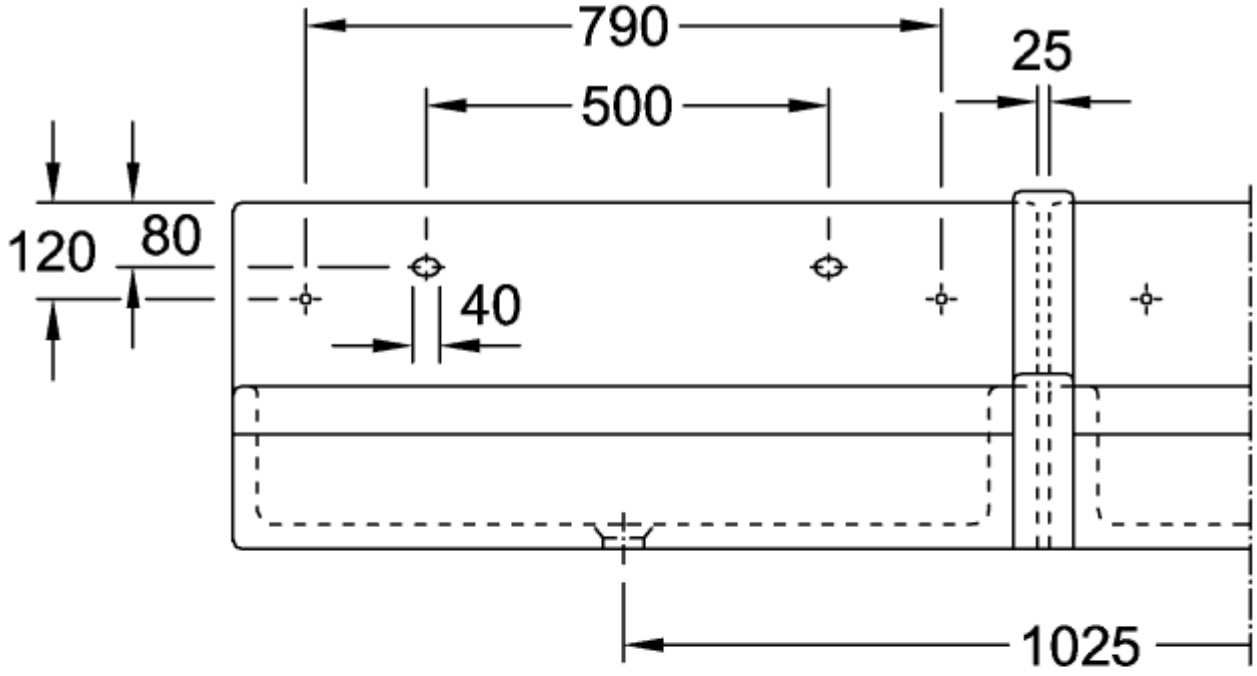

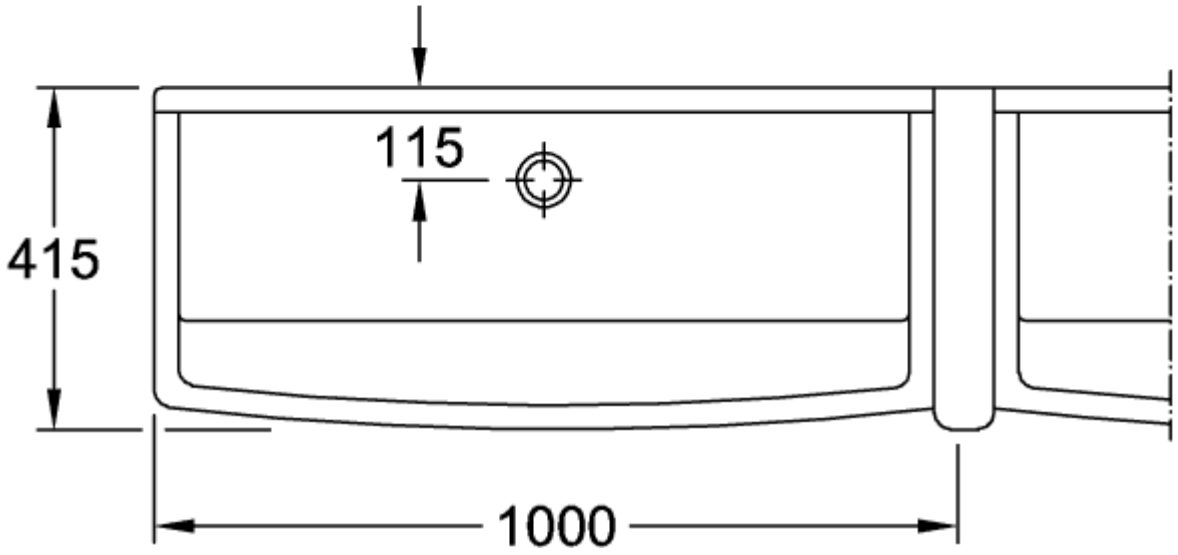

68200001

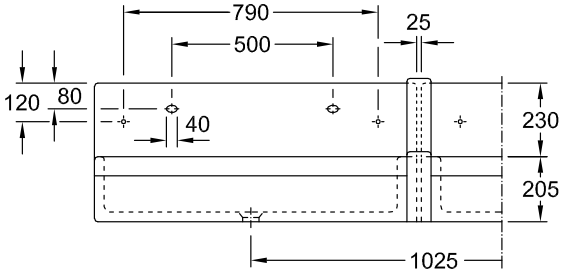
790
25
500
120
80
40
230
205
1025

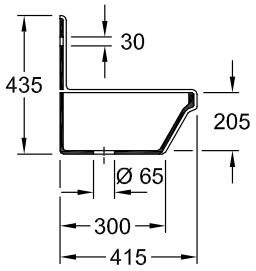
30
435
205
Ø 65
300
415

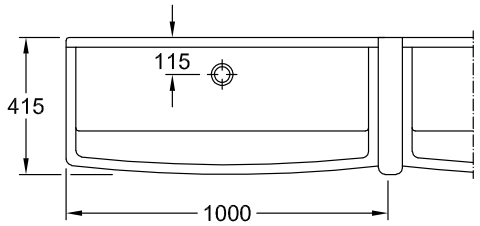
115
415
1000