VICARE WASHBASIN VICARE RECTANGLE

PRODUCT INFORMATION

Article title	Villeroy & Boch ViCare Washbasin ViCare, 600 x 490 x 180 mm, White Alpin, without overflow
Article number	71196101
Assembly / Assembly type	wall-mounted
Scope of delivery	1 x washbasin
Depth in mm	490
Width in mm	600
Height in mm	180
Interior depth	140
Collection	ViCare
Tap fitting / Tap hole information	Please note: unclosable outlet valve must be used with models without overflow
Suitable for	3-hole mixer, Accessible application
Material	Sanitary ceramics
surface	glossy
Colour name	White Alpin
With overflow	No
Shape	Rectangle
Colour designation	White Alpin
Antibacterial surface (with AntiBac)	No
Easy surface cleaning (CeramicPlus)	No
Number of tap holes punched through	1
Number of tap holes pre-drilled	2
Number of bowls	1

TECHNICAL DRAWINGS

71196101

DE

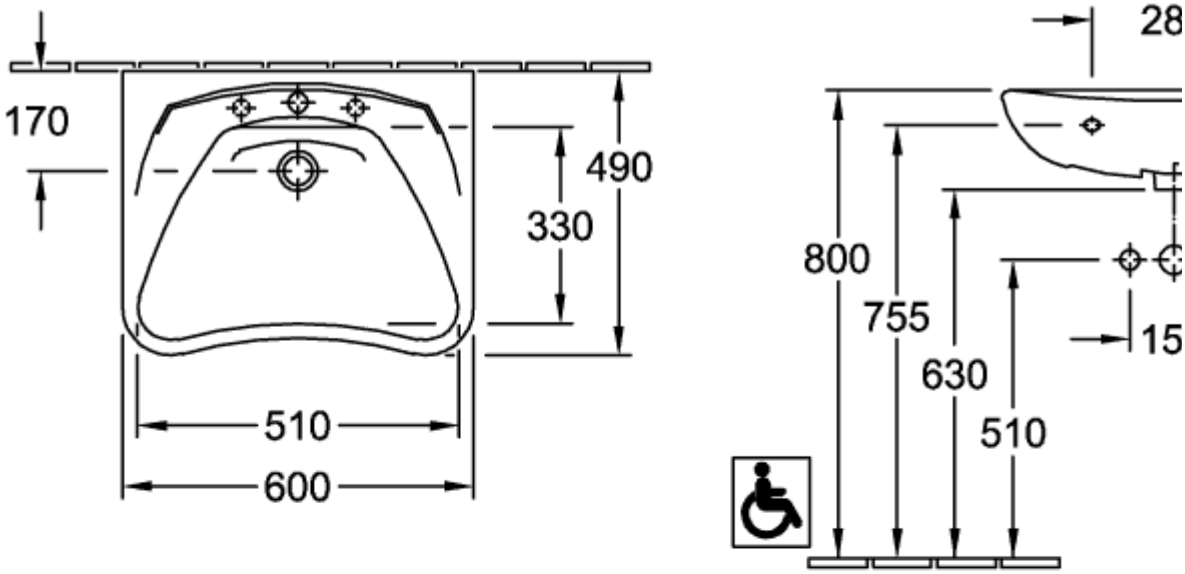

FR+

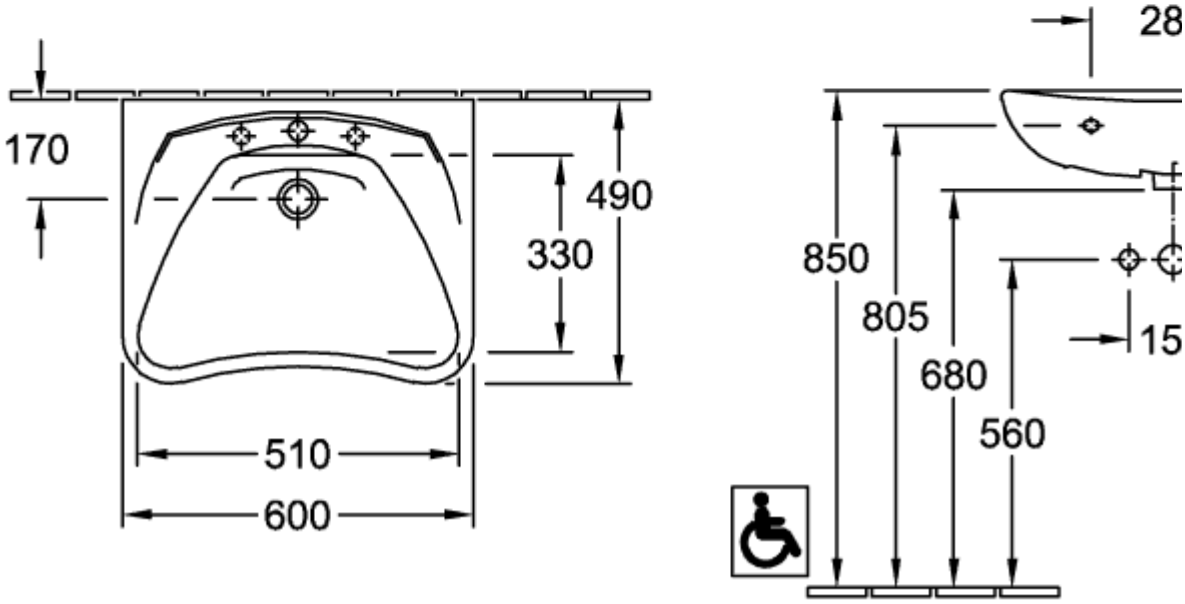

71196101

DE

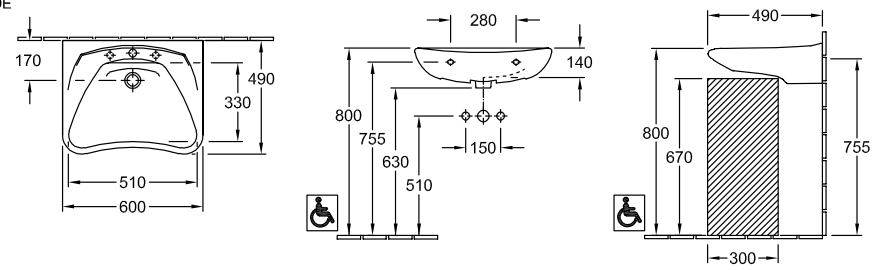
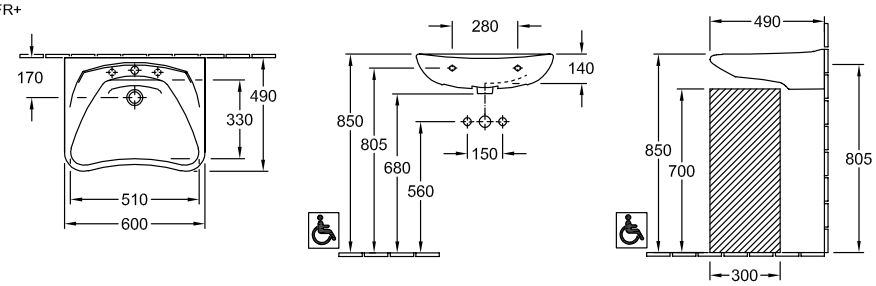
FR+