SUBWAY 2.0 DOUBLE VANITY WASHBASIN RECTANGLE

PRODUCT INFORMATION

Article title	Villeroy & Boch Subway 2.0 Double vanity washbasin, 1300 x 470 x 150 mm, White Alpin, with overflow
Article number	7175D001
Assembly / Assembly type	wall-mounted
Scope of delivery	1 x double vanity washbasin
Depth in mm	470
Width in mm	1300
Height in mm	150
Interior depth	105
Collection	Subway 2.0
Suitable for	two 3-hole tap fittings, Matching Villeroy&Boch furniture
Material	Sanitary ceramics
surface	glossy
Colour name	White Alpin
With overflow	Yes
Shape	Rectangle
Colour designation	White Alpin
Antibacterial surface (with AntiBac)	No
Easy surface cleaning (CeramicPlus)	No
Number of tap holes punched through	2
Number of tap holes pre-drilled	4
Number of bowls	2

TECHNICAL DRAWINGS

7175D001

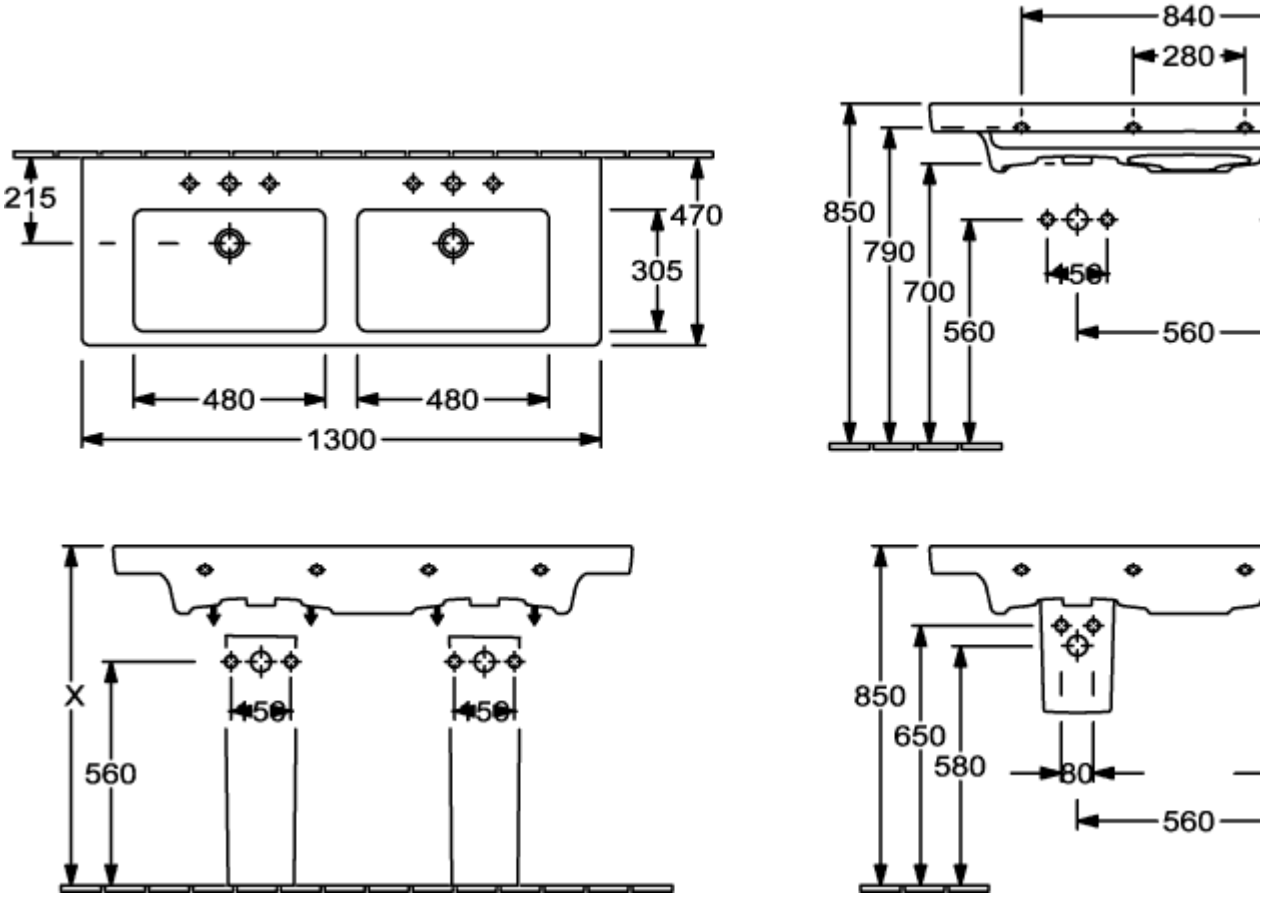

7175D001

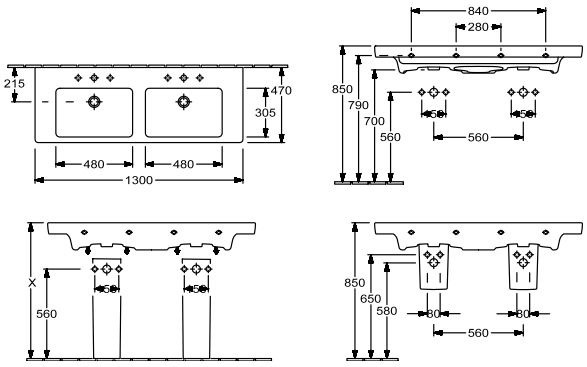

7175D001

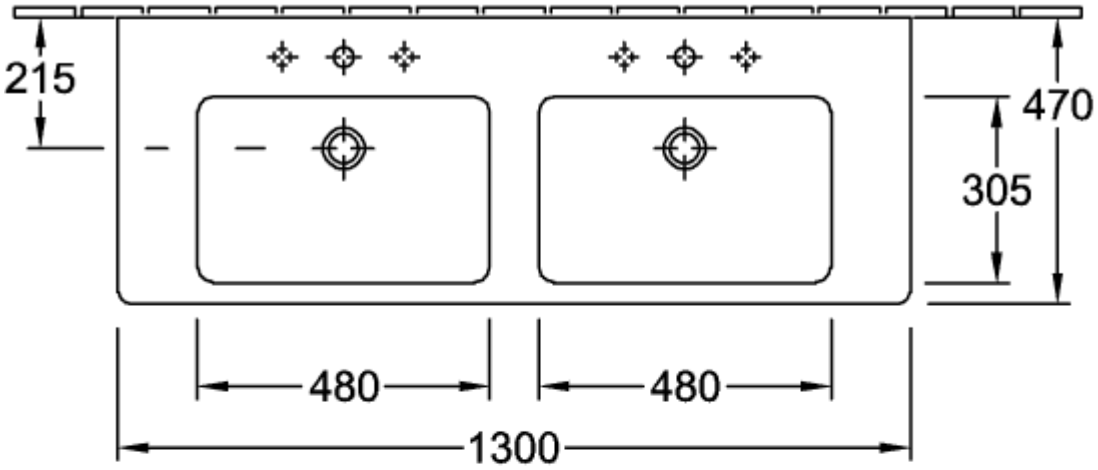

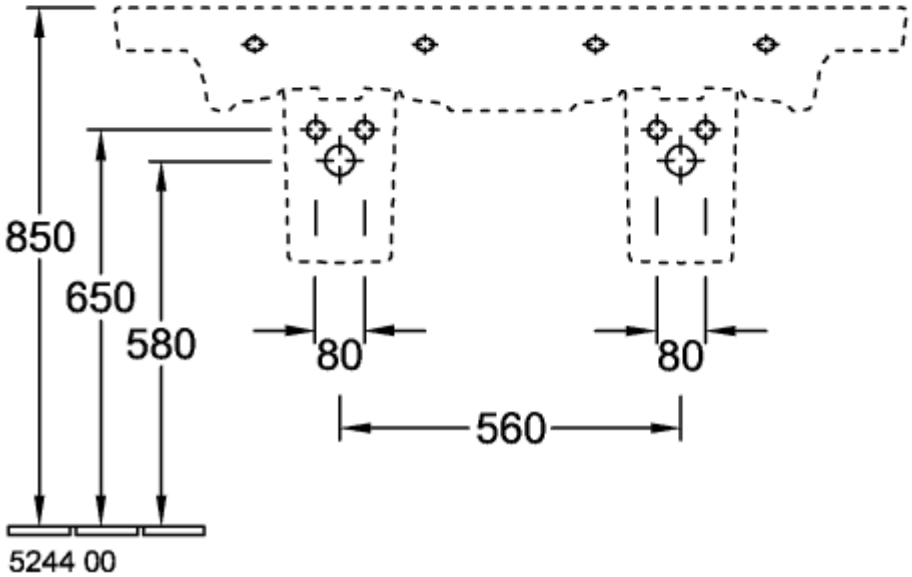

7175D001

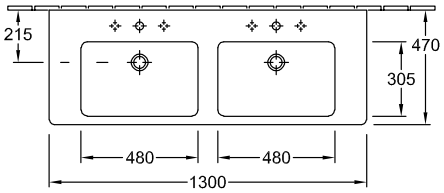
215
470
305
480
480
1300

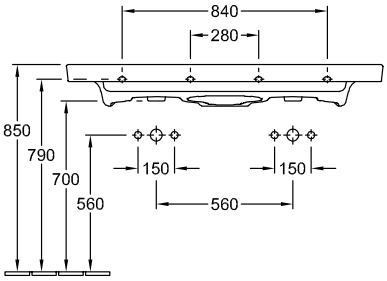
840
280
850
790
700
560
150
150
560

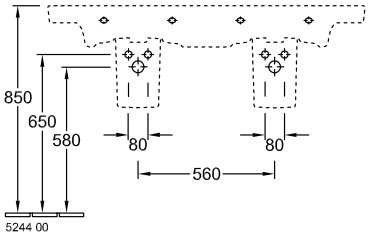
850
650
580
80
80
560
5244 00

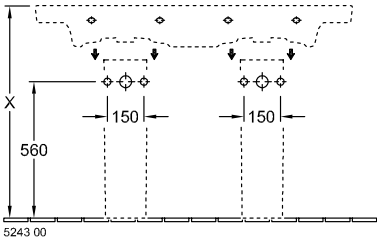
X
560
150
150
5243 00