LEGATO TALL CABINET ANGULAR

PRODUCT INFORMATION

Article title	Villeroy & Boch Legato Tall cabinet, 2 doors, 400 x 1550 x 350 mm, Glossy White / Glossy White
Article number	B73000DH
Assembly / Assembly type	wall-mounted
Type of opening	2 doors
Door hinge	hinges on left
Equipment	2 x door , 3 x shelf
Scope of delivery	1 x tall cabinet , 1 x fastening set
Depth in mm	350
Width in mm	400
Height in mm	1550
Collection	Legato
Function	with SoftClosing
Material front	MDF
Surface of front	Acrylic film
Material body	MDF
Surface of body	Acrylic film
Material cover panel	Chipboard
Shape	Angular
Colour designation	Glossy White
Colour designation of cover panel	Glossy White
With lighting	No
Smart home compatible	No

TECHNICAL DRAWINGS

B73000DH

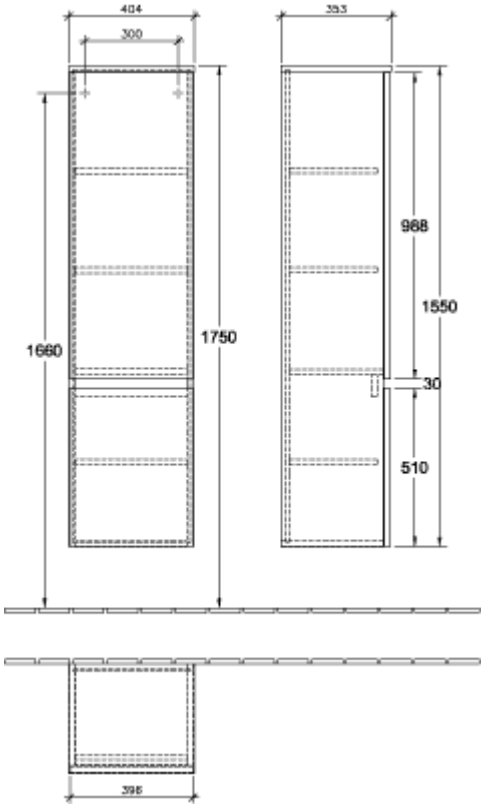
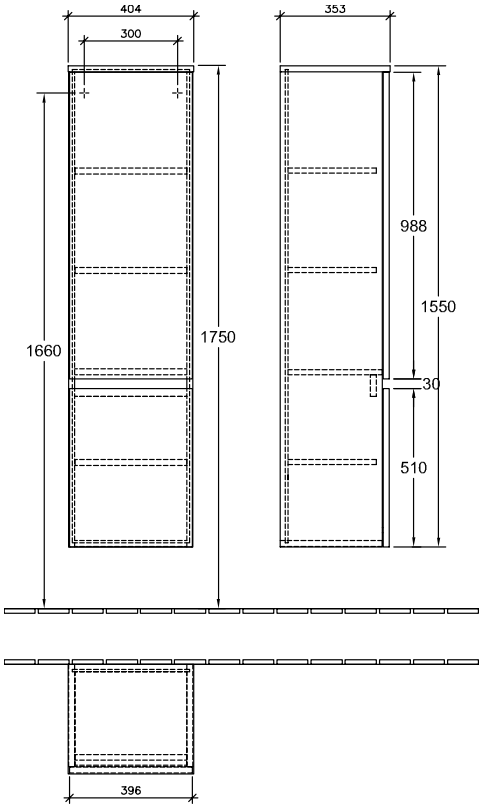
B73000DH