ANTHEUS FREE-STANDING BATH FREE-STANDING

PRODUCT INFORMATION

Article title	Villeroy & Boch Antheus Free-standing bath, 1550 x 750 mm, Stone White
Article number	UBQ155ANH7F400V-RW
Assembly / Assembly type	freestanding
Scope of delivery	1 x free-standing bath , 1 x stainless steel frame
Length in mm	1550
Width in mm	750
Height in mm	632
Interior depth	480
Collection	Antheus
Material	Quaryl®
Colour name	Stone White
Other material	Frame: Metal
Other surfaces	Frame: glossy
With overflow	No
Number of people	1
Shape	Free-standing
Colour designation	Stone White
Other colour designations	Frame: Chrome
With slip resistance	No
Outlet / outlet	central outlet
Interior form	oval
SilentFlow	No

TECHNICAL DRAWINGS

UBQ155ANH7F400V-RW

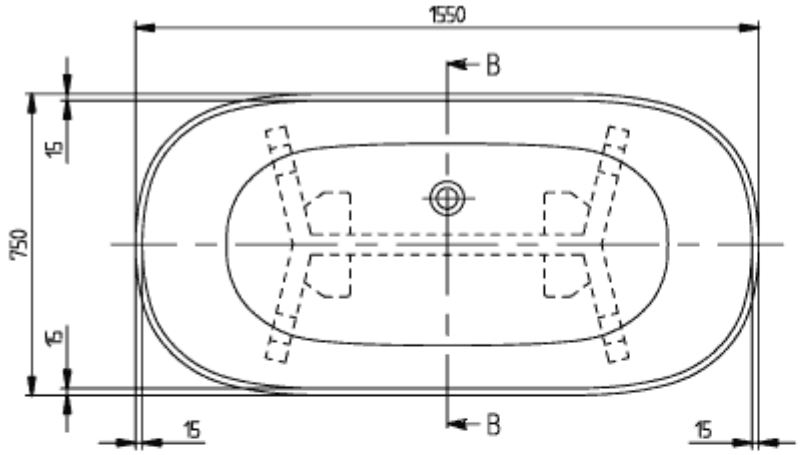

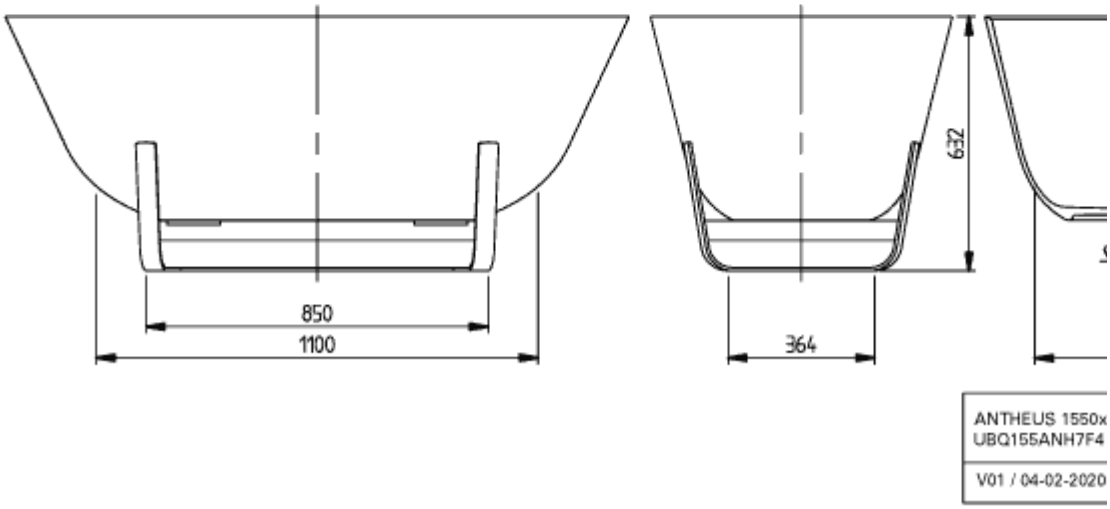
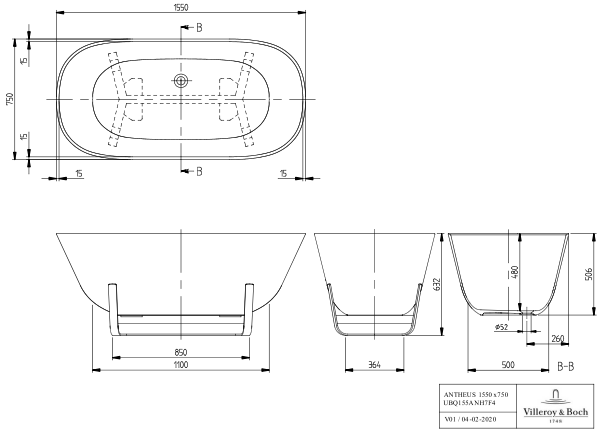
UBQ155ANH7F400V-RW