VICLEAN - L ELECTRONIC BIDET SEAT OVAL

PRODUCT INFORMATION

Article title	Villeroy & Boch ViClean-L Electronic bidet seat, White Alpin
Article number	V02EL401
Assembly instructions	Power and water connection must be available, Use only in working pressure range between 0.11 Mpa (dynamic) and 0.68 Mpa (static)| The water temperature must be between 0°C and 35°C.
Scope of delivery	1 x shower toilet seat , 1 x fastening set 1 x remote control
Depth in mm	537
Width in mm	392
Height in mm	157
Collection	ViClean
Innovative flushing technology (with TwistFlush)	No
Function	• with lighting • with seat heating • with warm water • with Rear wash • with Lady wash • with Comfort wash • with adjustable jet pressure • with adjustable water temperature • with adjustable nozzle position • with automatic nozzle cleaning before and after use
Material	Plastic
surface	glossy
Colour name	White Alpin
Shape	Oval
Colour designation	White Alpin
Antibacterial surface (with AntiBac)	No
Easy surface cleaning (CeramicPlus)	No
Rimless (mit DirectFlush)	No
Integrated freshness solution (with ViFresh)	No
With overflow	No

TECHNICAL DRAWINGS

V02EL401

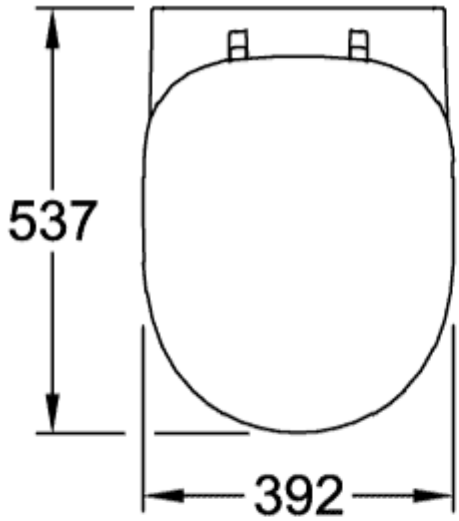

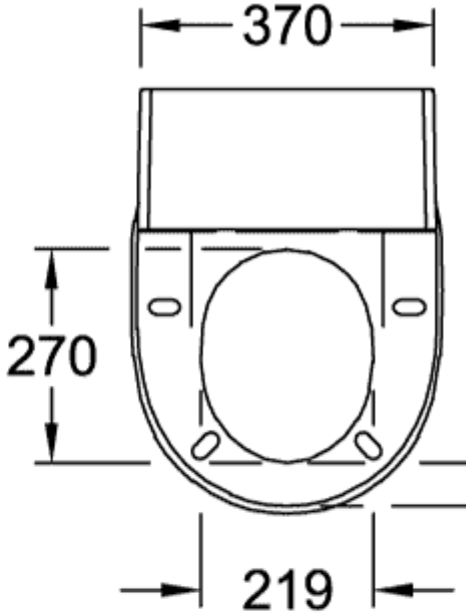

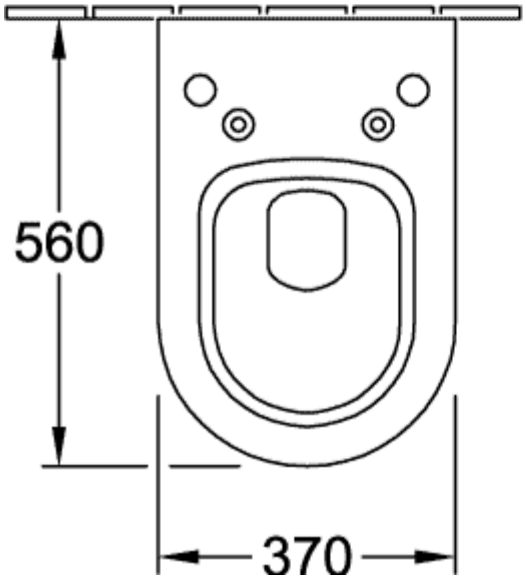

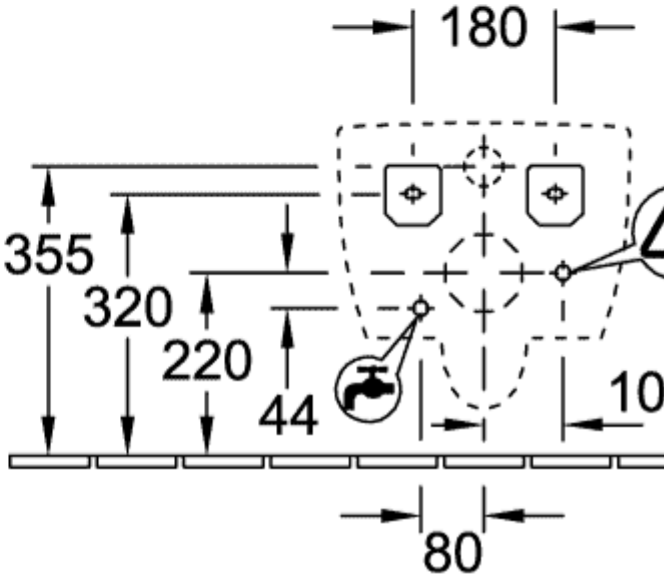

V02EL401

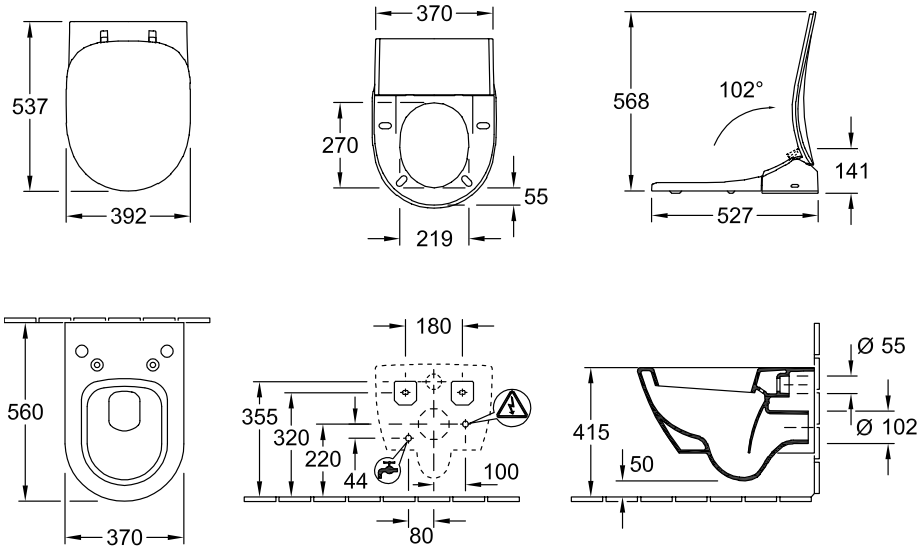
537
392
370
270
55
219
568
102°
141
527
560
370
180
355
320
220
44
100
80
415
50
Ø 55
Ø 102

V02EL401

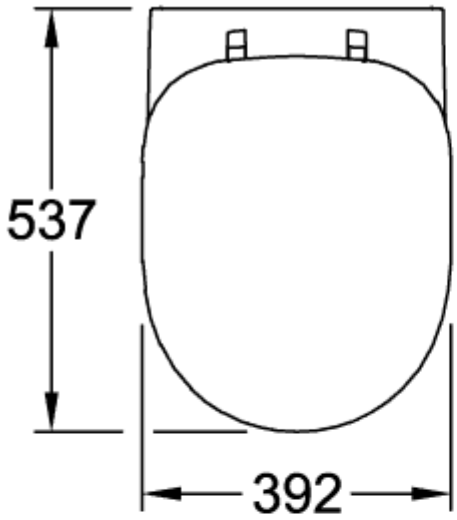

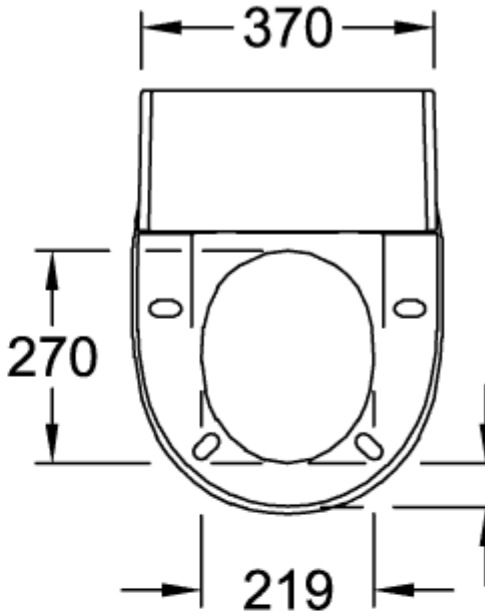

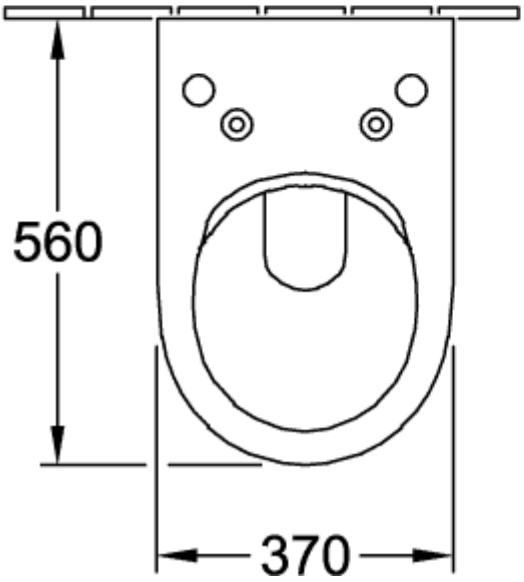

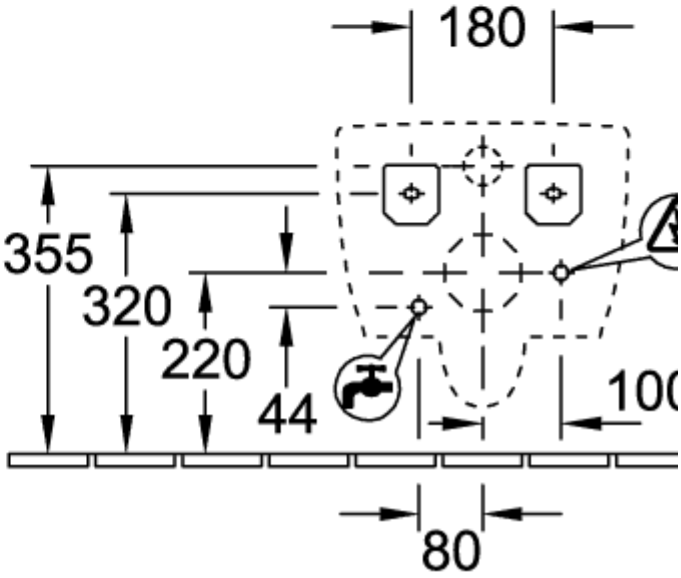

V02EL401

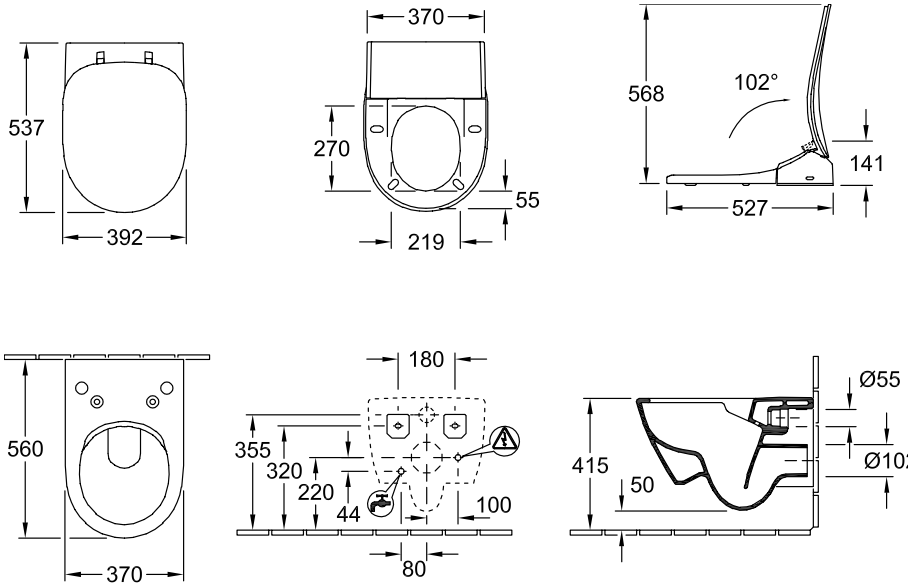

V02EL401

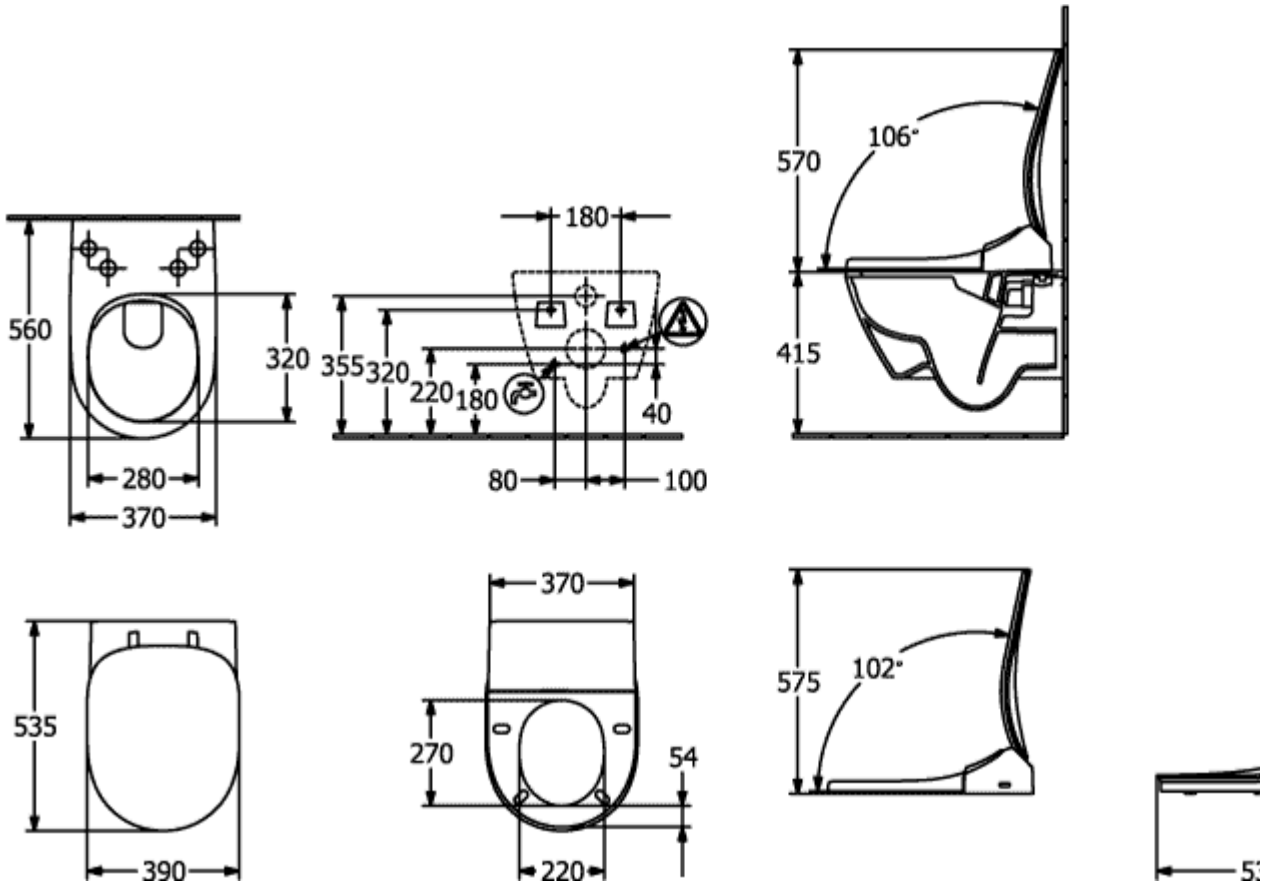

V02EL401

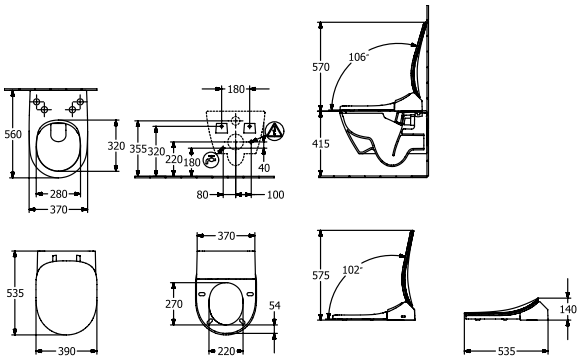
560
320
280
370
180
355
320
220
180
40
80
100
570
106
415
535
390
370
270
54
220
575
102
140
535