TIMELINE 50 FLAT FLUSH-MOUNTED SINK RECTANGLE

PRODUCT INFORMATION

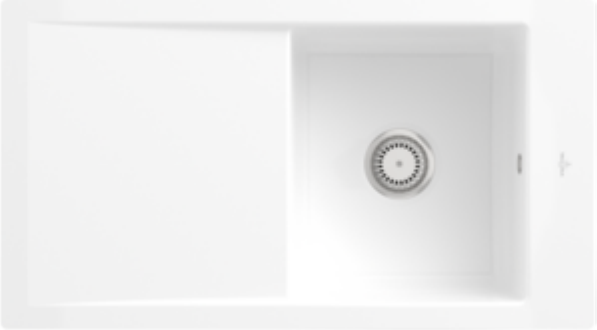

Article title	Villeroy & Boch Timeline 50 flat Flush-mounted sink, included Waste system hand-operated, of Ceramic, 865 x 475 mm, Snow White CeramicPlus
Article number	33071FKG
Assembly / Assembly type	flush-fitting installation
Assembly instructions	minimum unit width: 50 cm, For flush-fit installation in natural stone or artificial stone countertops| Minimum thickness of the countertop when placed with a dishwasher: at least 4 cm
Scope of delivery	1 x sink , 1 x basket strainer waste
Length in mm	475
Width in mm	865
Height in mm	220
Interior depth	200
Collection	Timeline 50 flat
Material	Ceramic
Colour name	Snow White CeramicPlus
Other material	Grate: Stainless steel Valve: Stainless steel
Position of main bowl	Basin, reversible
Function of the drain fitting	basket strainer waste
Colour designation	Snow White
Other colour designations	Grate: Chrome, Valve: Chrome

TECHNICAL DRAWINGS

33071FKG

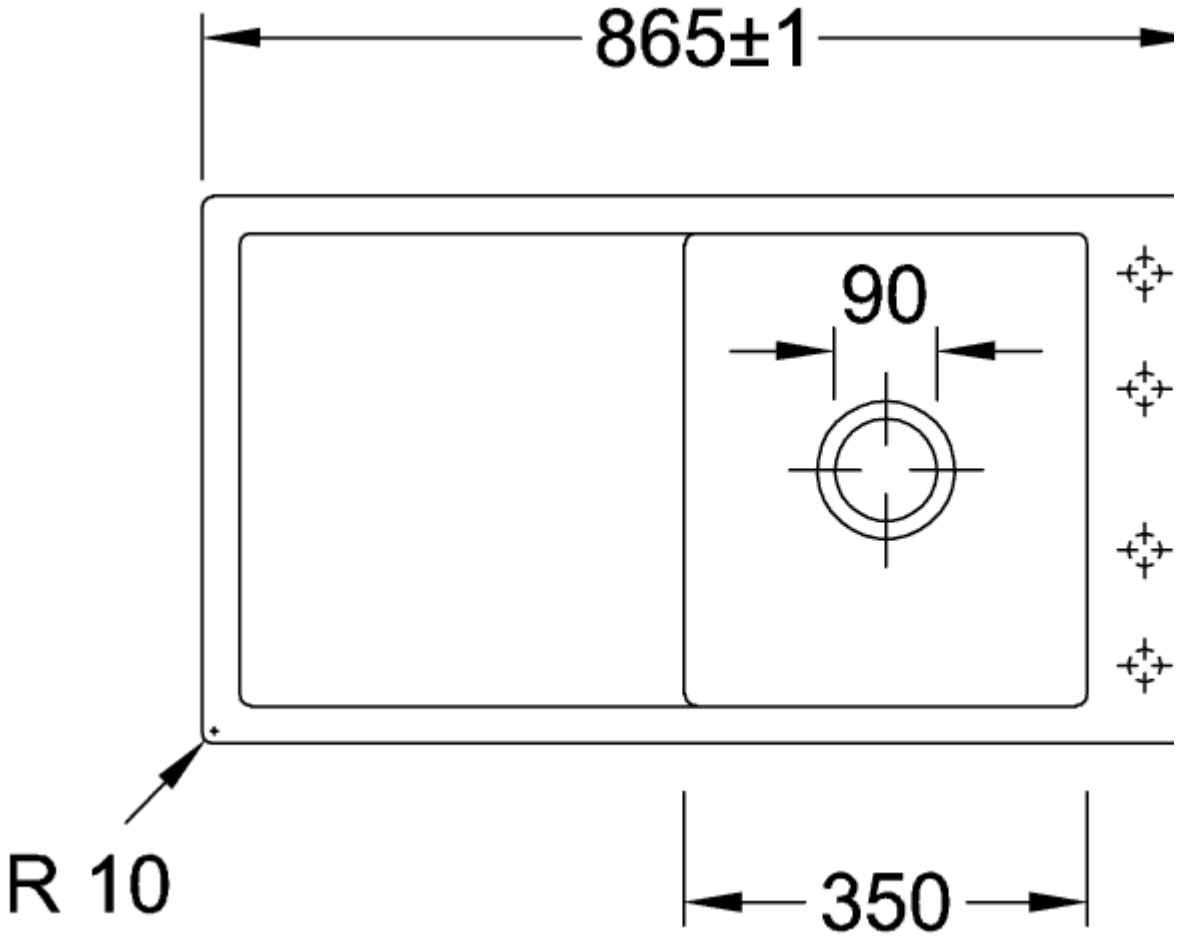
865±1
90
R 10
350

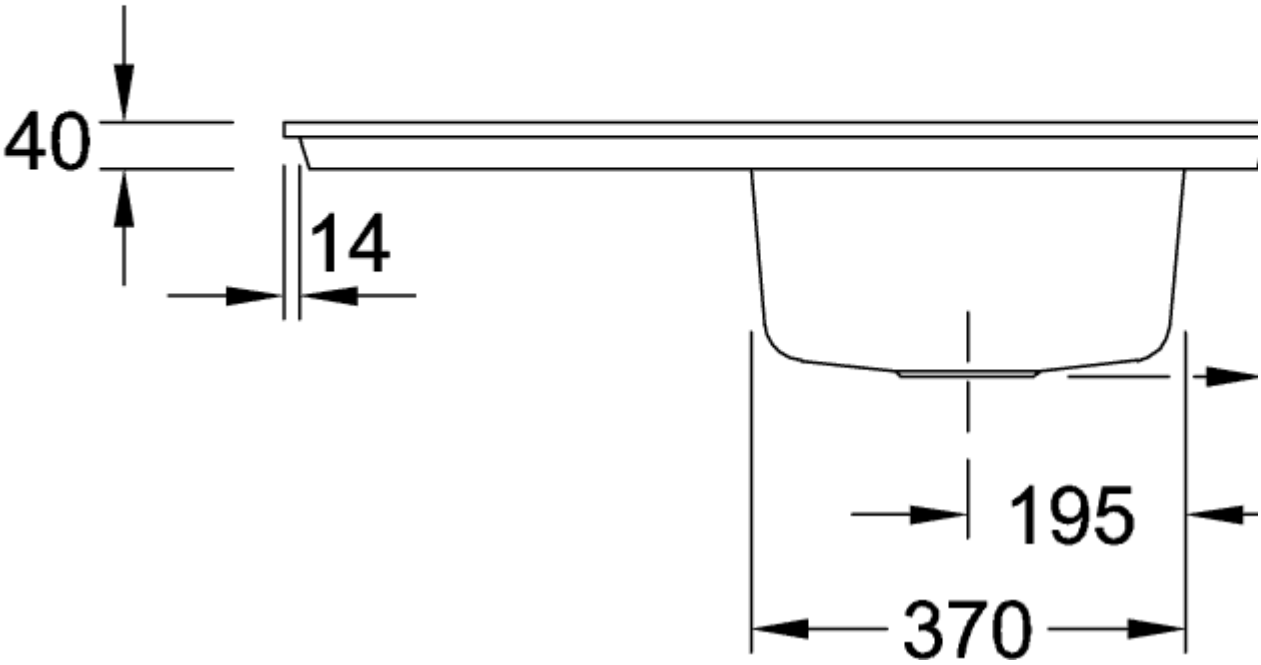
40
14
195
370
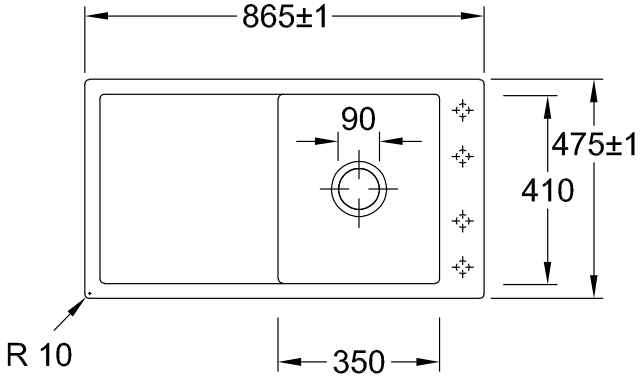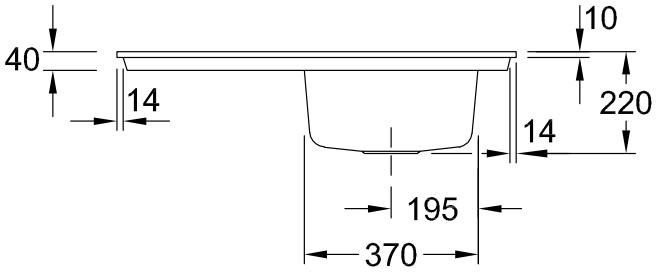
33071FKG