ARCHITECTURA 60 XR BUILT-IN SINK RECTANGLE

PRODUCT INFORMATION

Article title	Villeroy & Boch Architectura 60 XR Built-in sink, included Waste system pop-up, of Ceramic, 1000 x 510 mm, Almond CeramicPlus
Article number	336502AM
Assembly / Assembly type	surface-mounted installation
Assembly instructions	minimum unit width: 60 cm
Scope of delivery	1 x sink , 1 x pop-up waste system 1 x cover cap, round
Length in mm	510
Width in mm	1000
Height in mm	220
Interior depth	200
Collection	Architectura 60 XR
Material	Ceramic
Colour name	Almond CeramicPlus
Other material	Grate: Stainless steel Valve: Stainless steel
Position of main bowl	Basin, reversible
Function of the drain fitting	pop-up waste system
Colour designation	Almond
Other colour designations	Grate: Chrome, Valve: Chrome

TECHNICAL DRAWINGS

336502AM

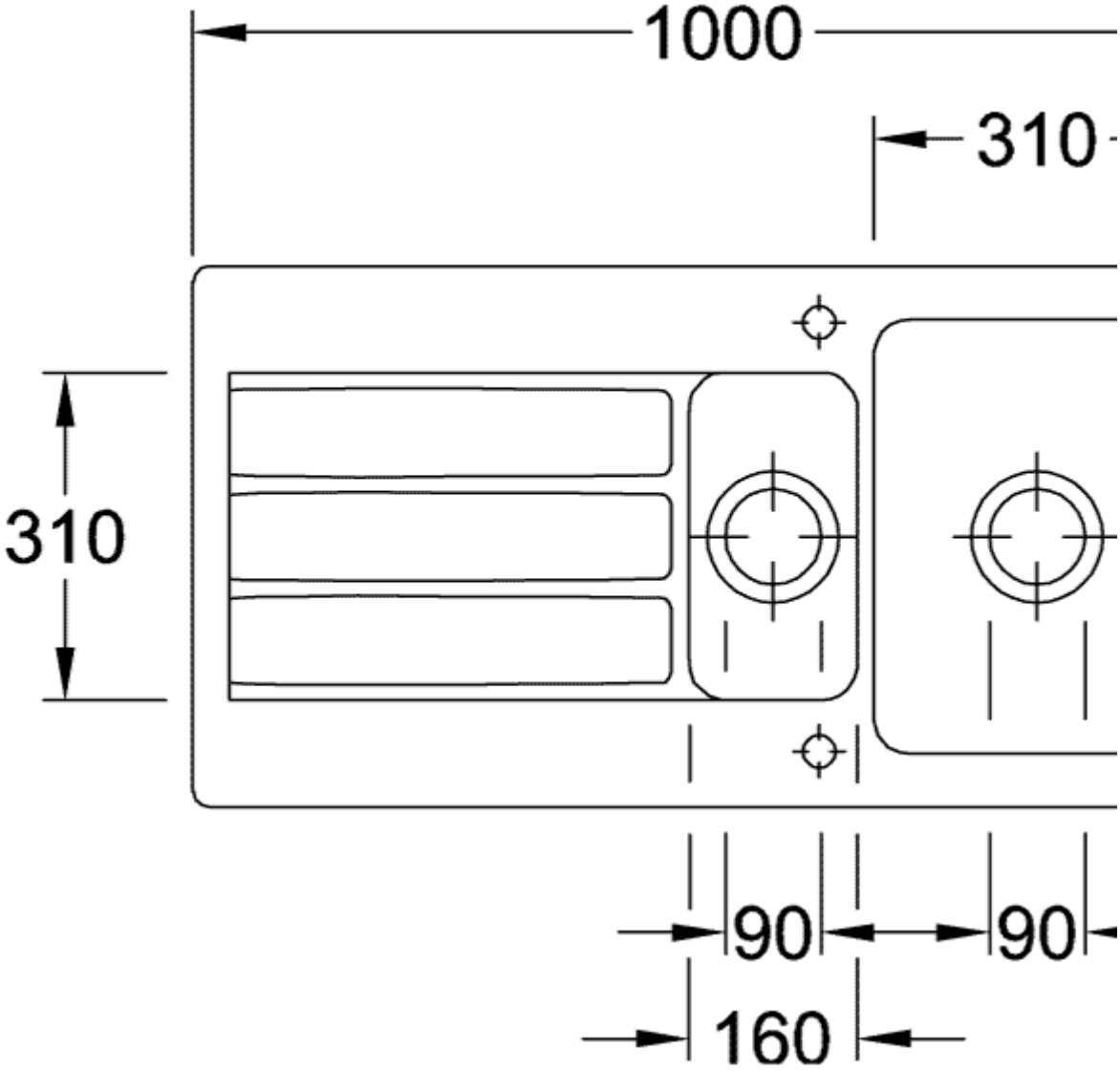
1000
310
310
90
90
160

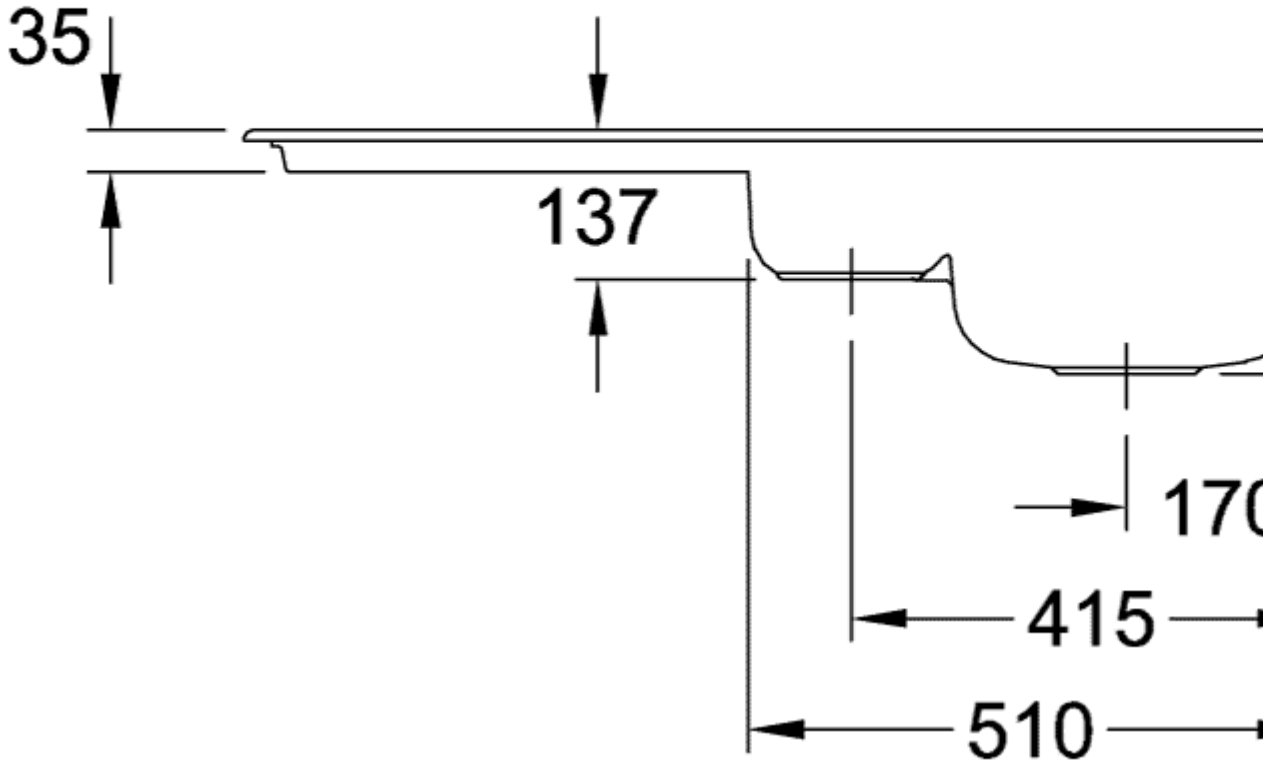
35
137
170
415
510
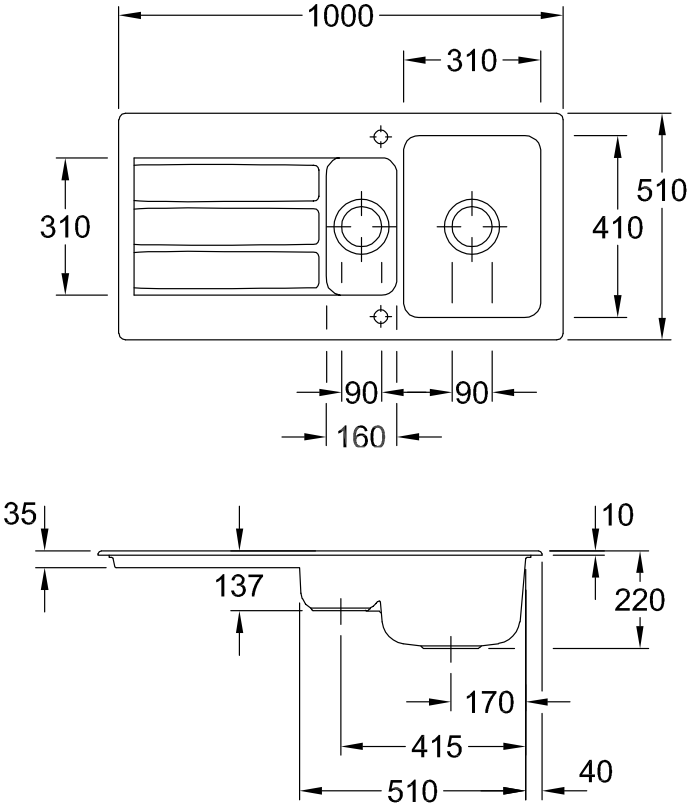
336502AM