SUBWAY 45 BUILT-IN SINK RECTANGLE

PRODUCT INFORMATION

Article title	Villeroy & Boch Subway 45 Built-in sink, included Waste system pop-up
Article number	671402KP
Assembly / Assembly type	surface-mounted installation
Assembly instructions	minimum unit width: 45 cm
Scope of delivery	1 x sink , 1 x pop-up waste system 1 x cover cap, round
Interior depth	200
Collection	Subway 45
Position of main bowl	Basin on right
Function of the drain fitting	pop-up waste system

TECHNICAL DRAWINGS

671402KP

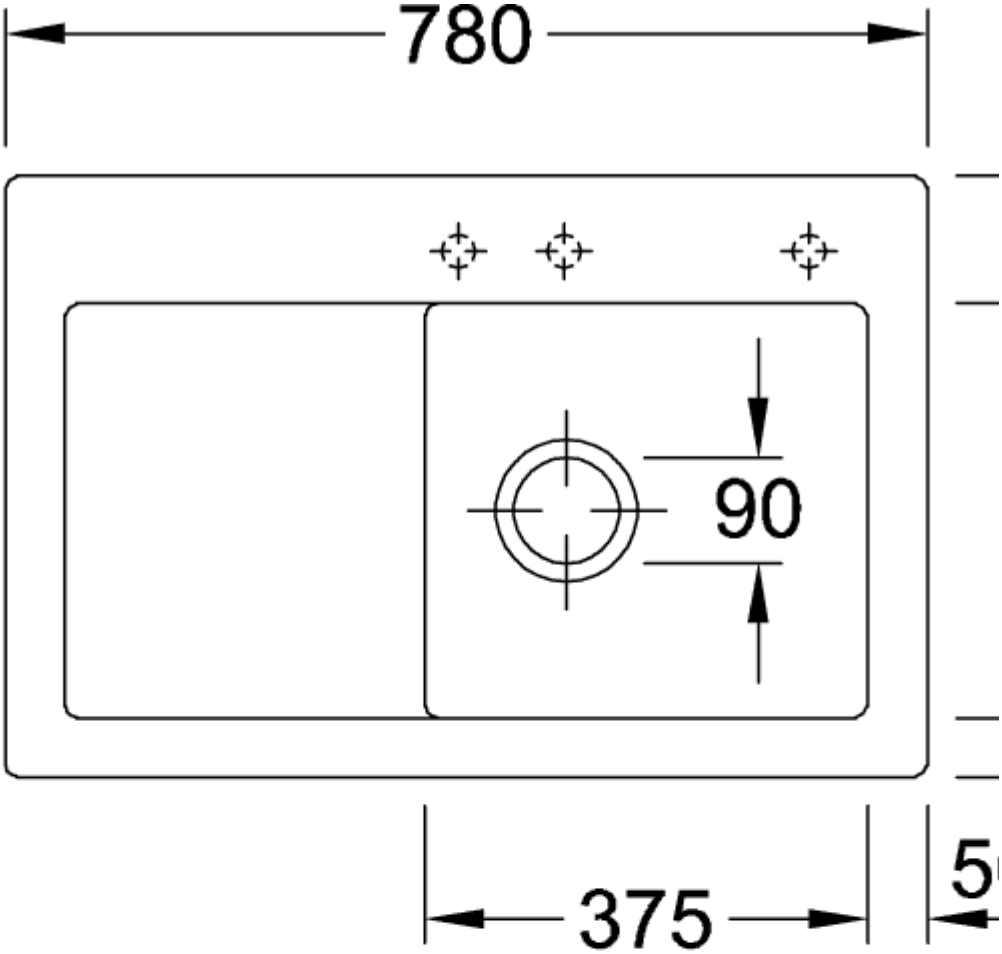

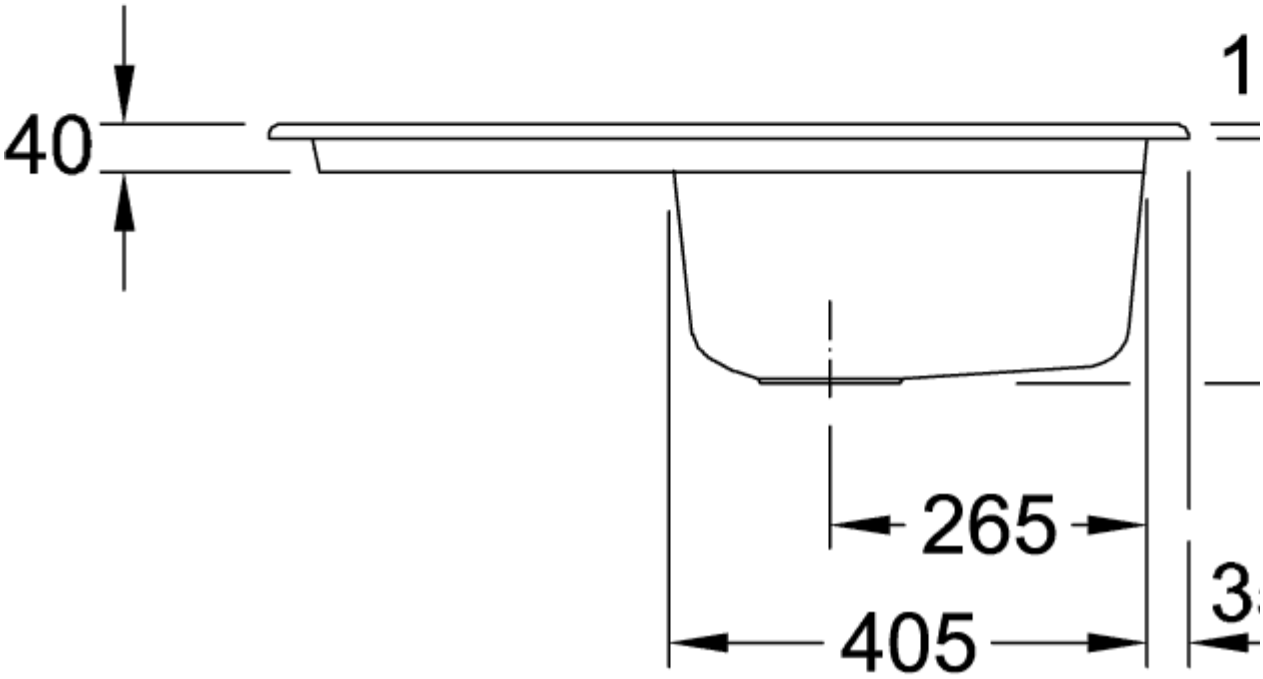
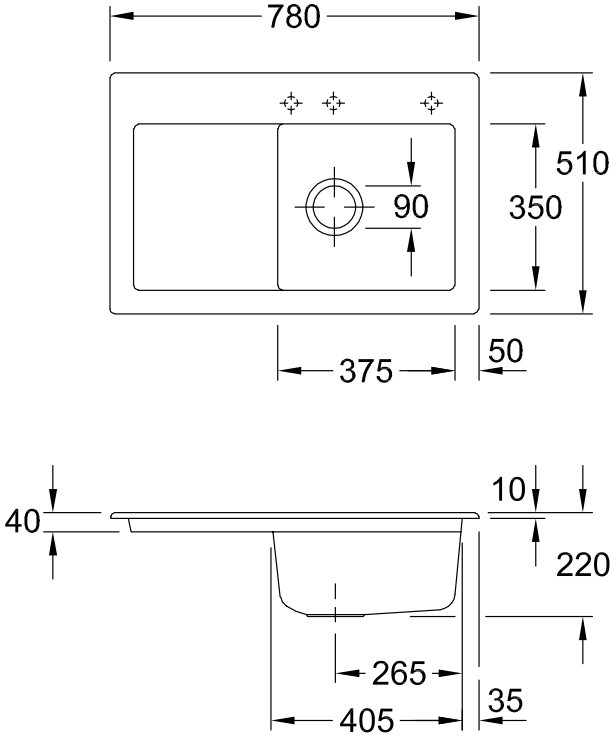
671402KP