ARENA CORNER CORNER SINK CORNER

PRODUCT INFORMATION

Article title	Villeroy & Boch Arena corner Corner sink, included Strainer bowl, Waste system pop-up, Espresso glossy
Article number	672902KS
Assembly / Assembly type	surface-mounted installation
Assembly instructions	Installation on a corner undersink cabinet with 90 cm side length.
Scope of delivery	1 x sink , 1 x pop-up waste system 1 x cover cap, round 1 x strainer bowl
Interior depth	180
Collection	Arena corner
Colour name	Espresso glossy
Position of main bowl	Basin centred
Function of the drain fitting	pop-up waste system

TECHNICAL DRAWINGS

672902KS

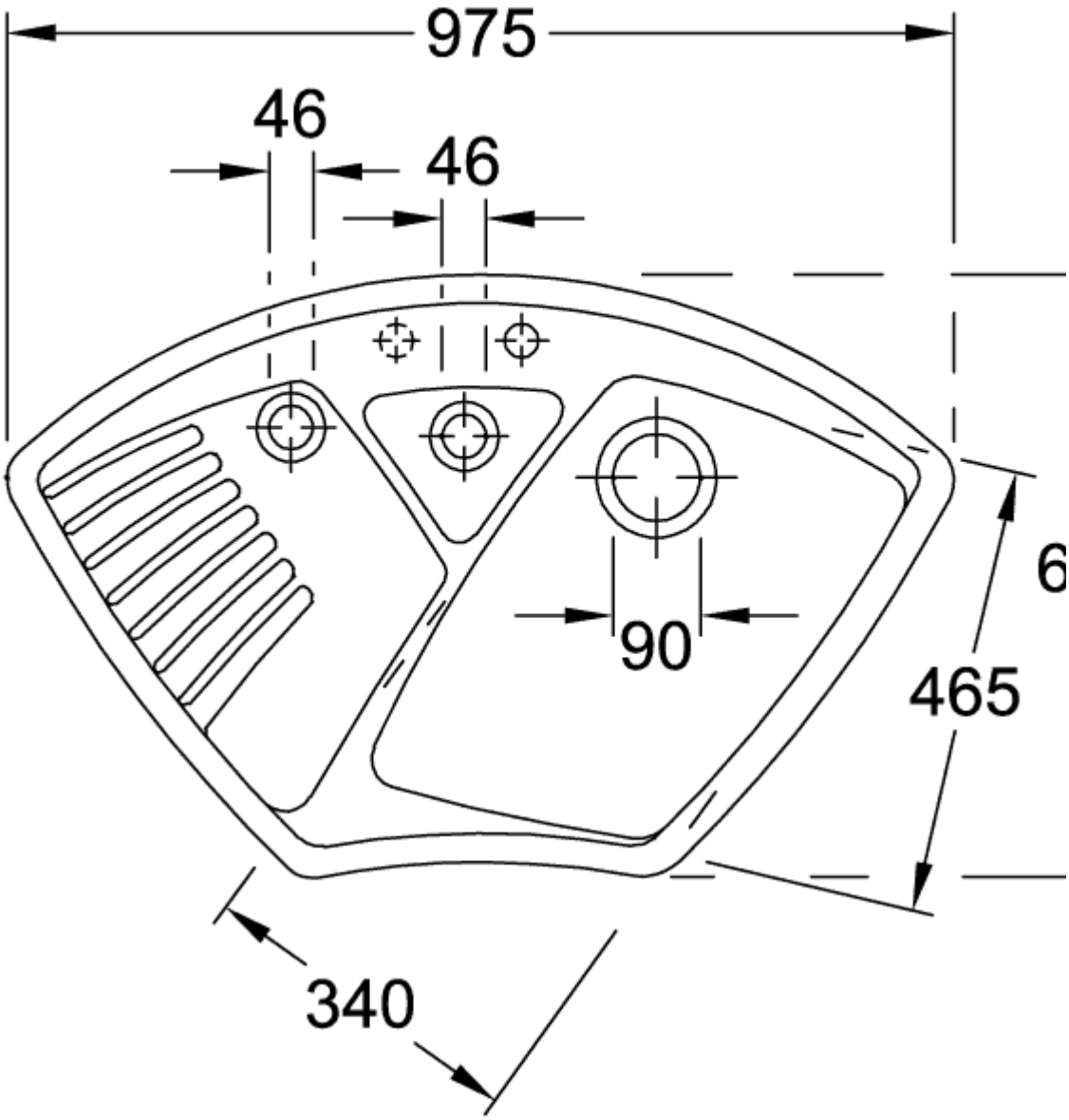
975
46
46
90
465
340

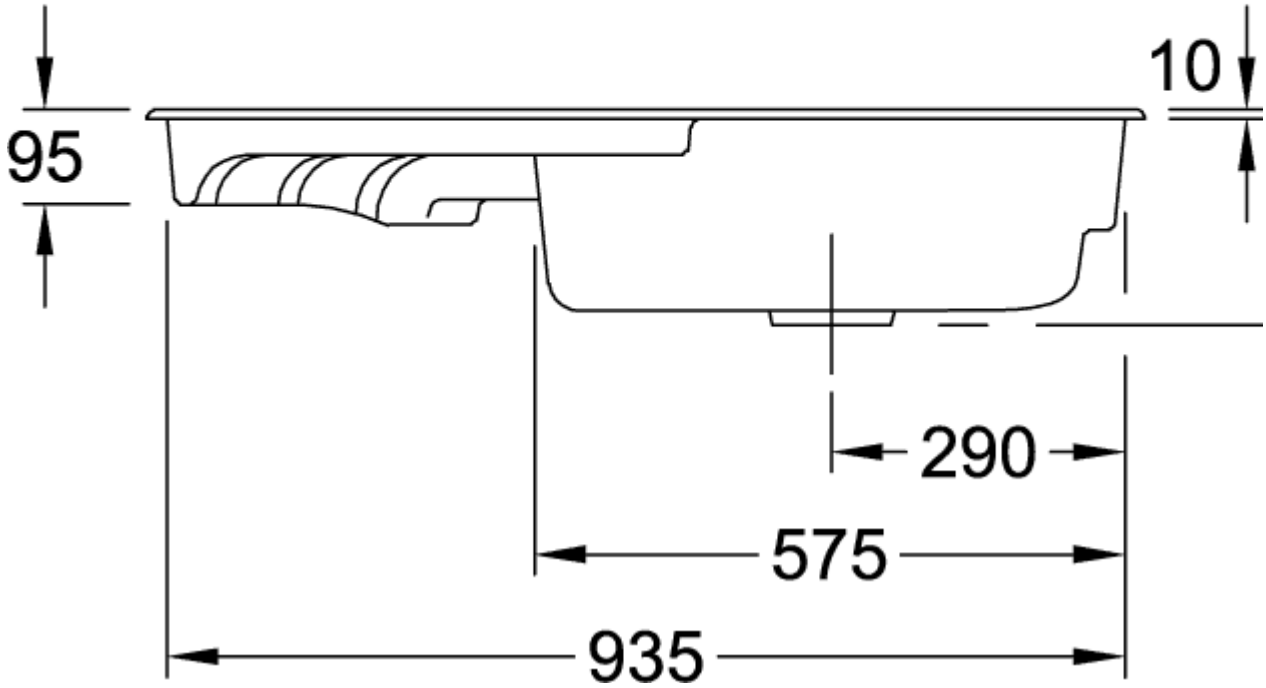
10
95
290
575
935
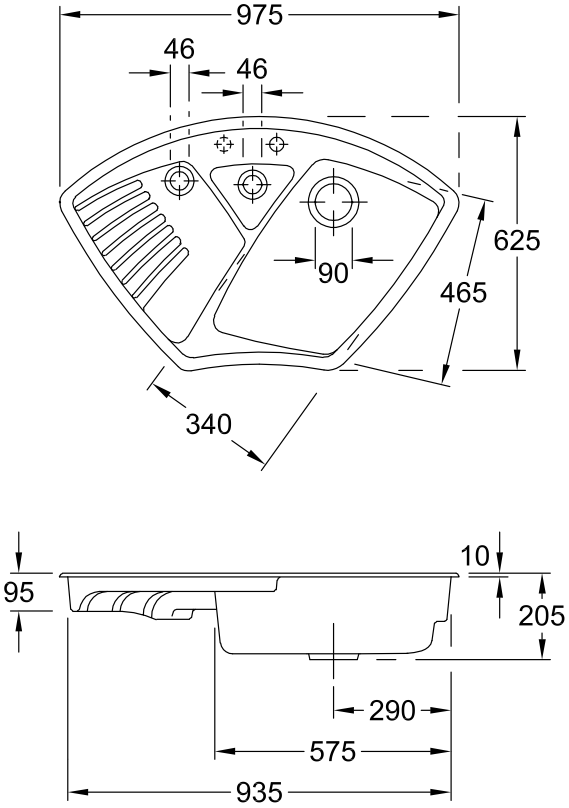
672902KS