TIMELINE 45 FLAT FLUSH-MOUNTED SINK RECTANGLE

PRODUCT INFORMATION

Article title	Villeroy & Boch Timeline 45 flat Flush-mounted sink, included Waste system pop-up, Grani-Creme
Article number	67912Fi3
Assembly / Assembly type	flush-fitting installation
Assembly instructions	minimum unit width: 45 cm, For flush-fit installation in natural stone or artificial stone countertops| Minimum thickness of the countertop when placed with a dishwasher: at least 4 cm
Scope of delivery	1 x sink , 1 x pop-up waste system 1 x cover cap, round
Interior depth	202
Collection	Timeline 45 flat
Colour name	Grani-Creme
Position of main bowl	Basin, reversible
Function of the drain fitting	pop-up waste system

TECHNICAL DRAWINGS

67912Fi3

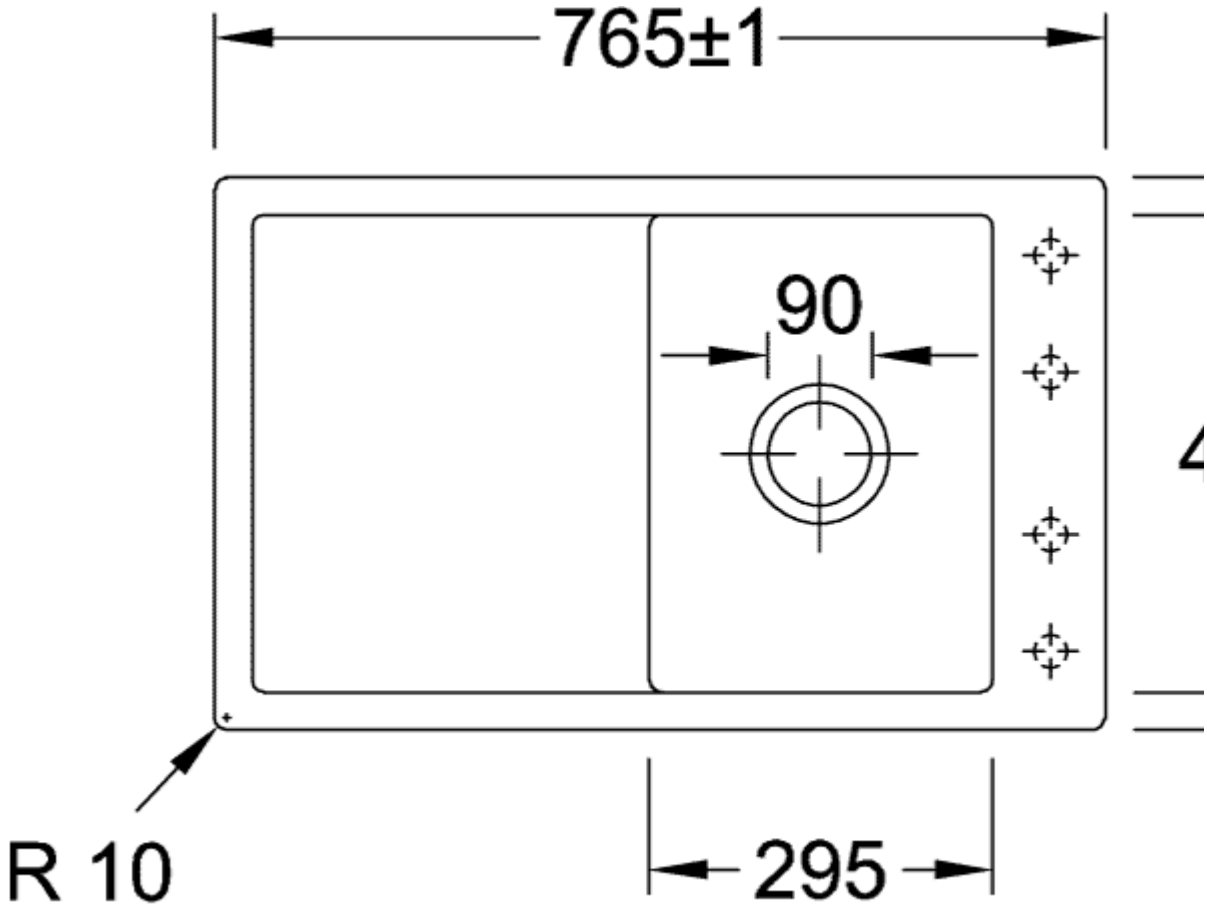
765±1
90
R 10
295

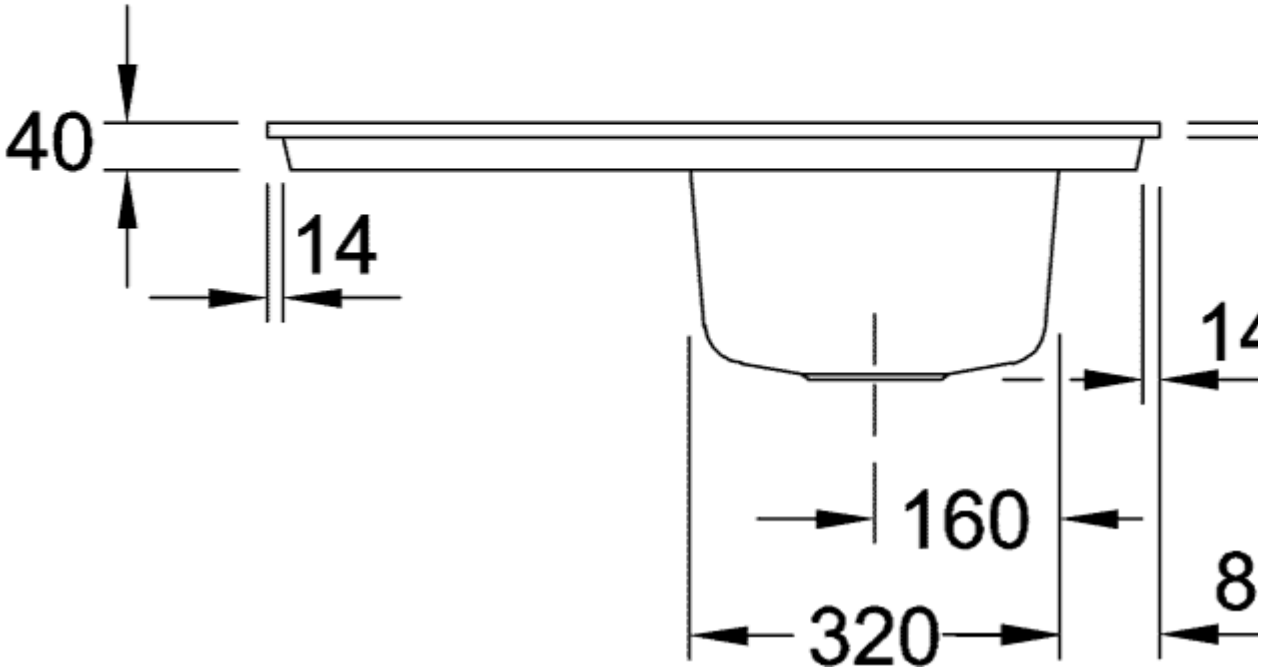
40
14
160
320
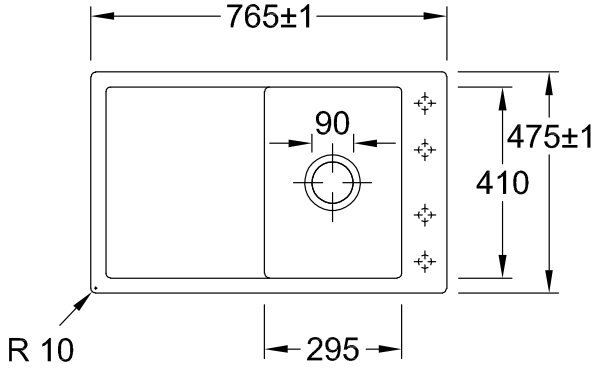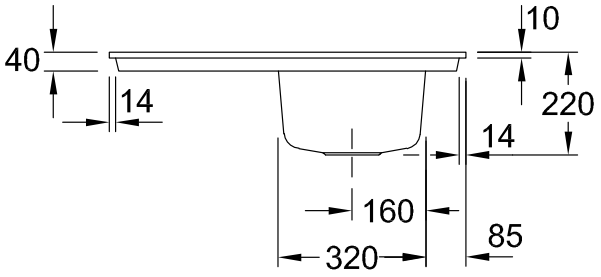
67912Fi3