SILUET 50 S FLAT FLUSH-MOUNTED SINK RECTANGLE

PRODUCT INFORMATION

Article title	Villeroy & Boch Siluet 50 S flat Flush-mounted sink, included Waste system pop-up, of TitanCeram, 470 x 470 mm, Snow White CeramicPlus
Article number	33452FKG
Assembly / Assembly type	flush-fitting installation
Assembly instructions	minimum unit width: 50 cm
Scope of delivery	1 x sink , 1 x pop-up waste system 1 x cover cap, round
Length in mm	470
Width in mm	470
Height in mm	220
Interior depth	200
Collection	Siluet 50 S flat
Material	TitanCeram
Colour name	Snow White CeramicPlus
Other material	Grate: Stainless steel Valve: Stainless steel
Design Awards	KitchenInnovation of the Year® 2018
Function of the drain fitting	pop-up waste system
Colour designation	Snow White
Other colour designations	Grate: Chrome, Valve: Chrome

TECHNICAL DRAWINGS

33452FKG

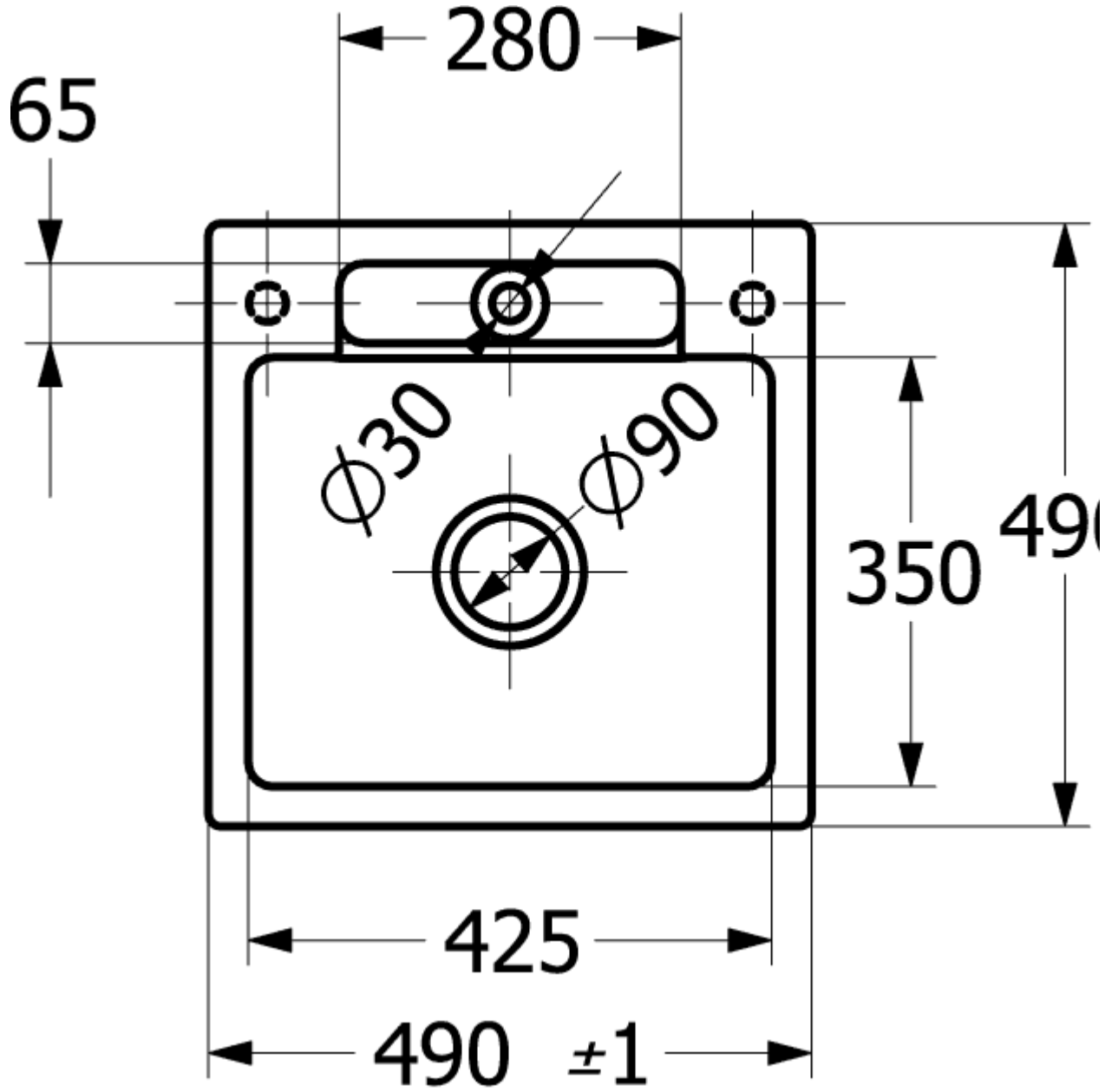
280
65
Ø30
Ø90
350
425
490 ±1

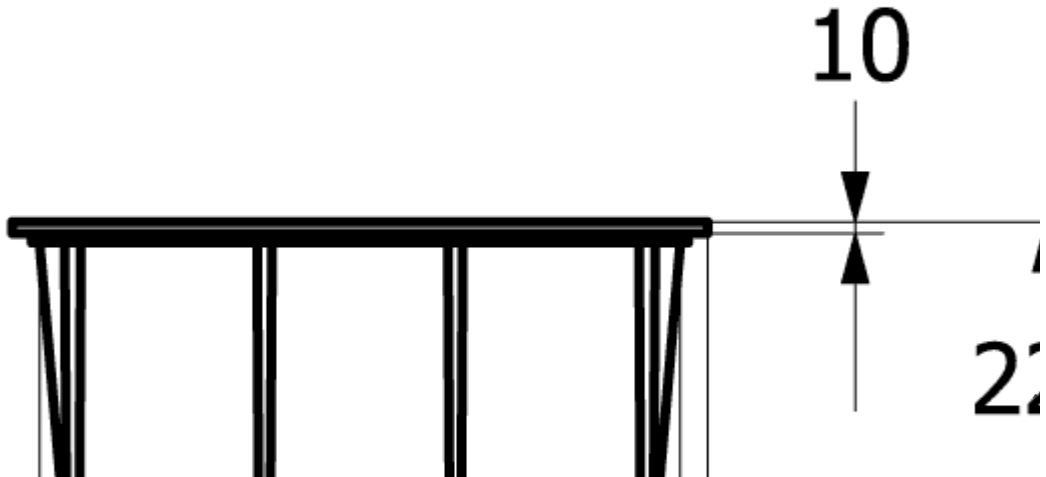
10
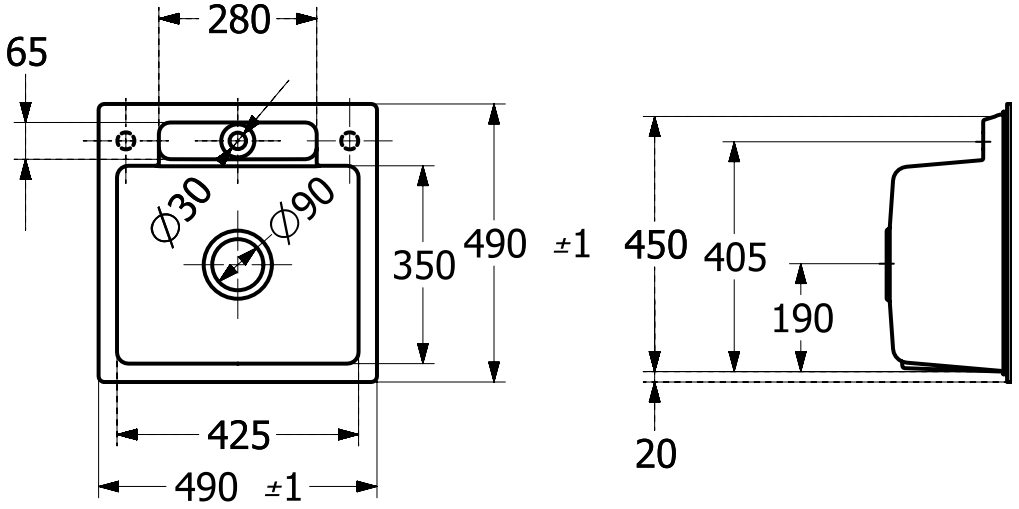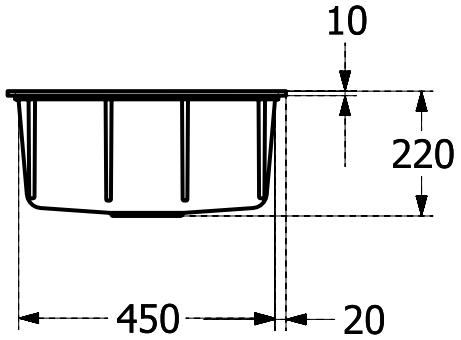
33452FKG