SUBWAY 60 XL BUILT-IN SINK RECTANGLE

PRODUCT INFORMATION

Article title	Villeroy & Boch Subway 60 XL Built-in sink, included Waste system pop-up, of Ceramic, 1000 x 510 mm, Steam CeramicPlus
Article number	671802SM
Assembly / Assembly type	surface-mounted installation
Assembly instructions	minimum unit width: 60 cm
Scope of delivery	1 x sink , 1 x pop-up waste system 1 x cover cap, round
Length in mm	510
Width in mm	1000
Height in mm	220
Interior depth	200
Collection	Subway 60 XL
Material	Ceramic
Colour name	Steam CeramicPlus
Other material	Grate: Stainless steel Valve: Stainless steel
Position of main bowl	Basin on left
Function of the drain fitting	pop-up waste system
Colour designation	Steam
Other colour designations	Grate: Chrome, Valve: Chrome

TECHNICAL DRAWINGS

671802SM

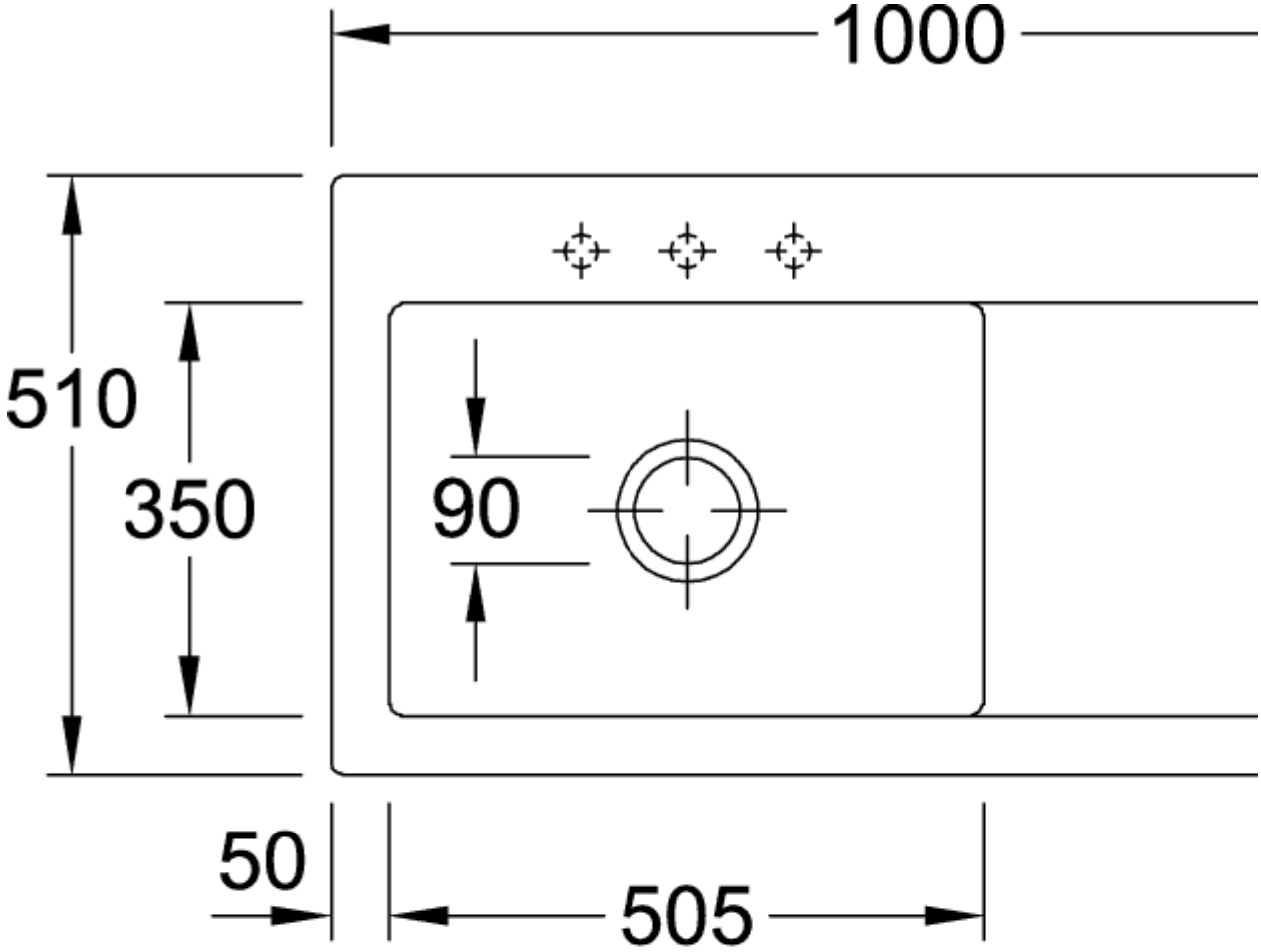

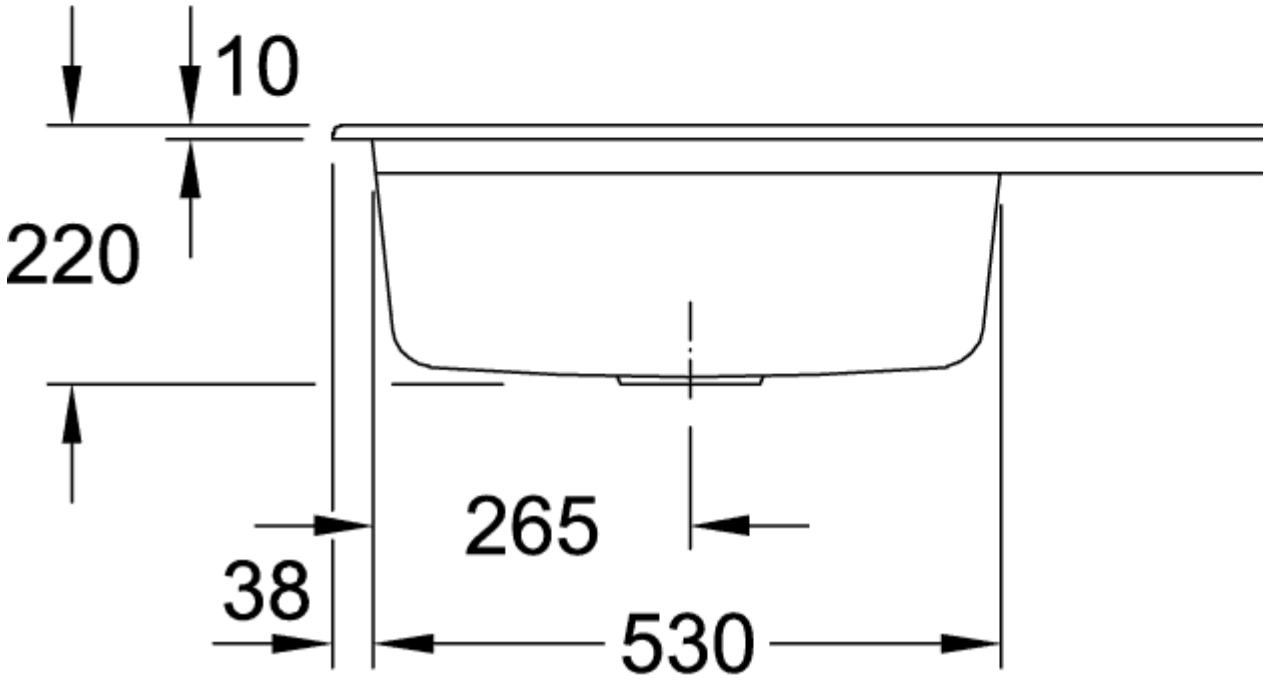
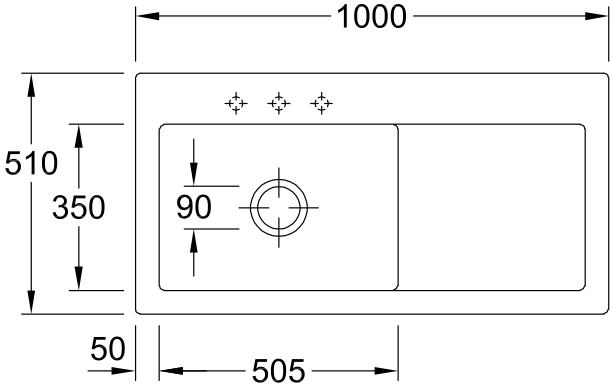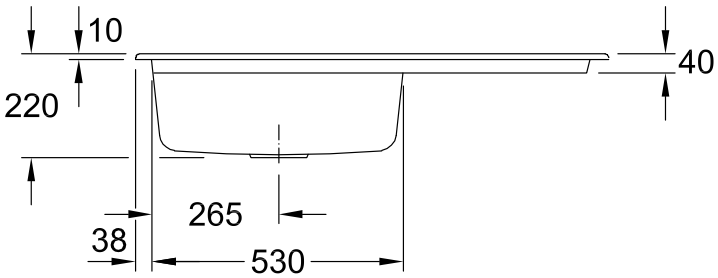
671802SM